# SUBWAY 45 BUILT-IN SINK RECTANGLE

## PRODUCT INFORMATION

| | |
|---|---|
| Article title | Villeroy & Boch Subway 45 Built-in sink, included Waste system hand-operated |
| Article number | 677201KP |
| Assembly / Assembly type | surface-mounted installation |
| Assembly instructions | minimum unit width: 45 cm |
| Scope of delivery | 1 x sink , 1 x basket strainer waste |
| Interior depth | 200 |
| Collection | Subway 45 |
| Position of main bowl | Basin on left |
| Function of the drain fitting | basket strainer waste |

# TECHNICAL DRAWINGS

**677201KP**

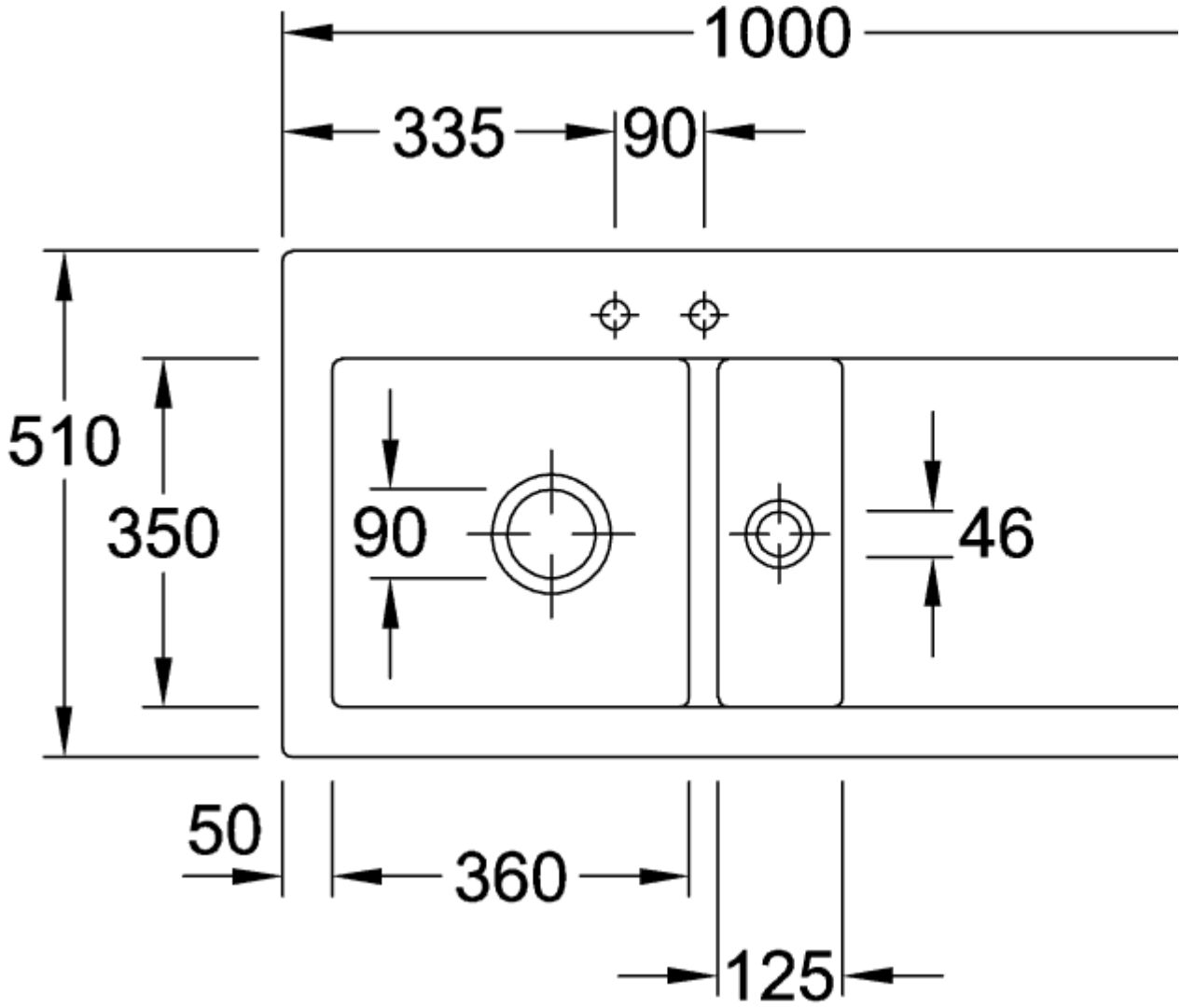
1000
335
90
510
350
90
46
50
360
125

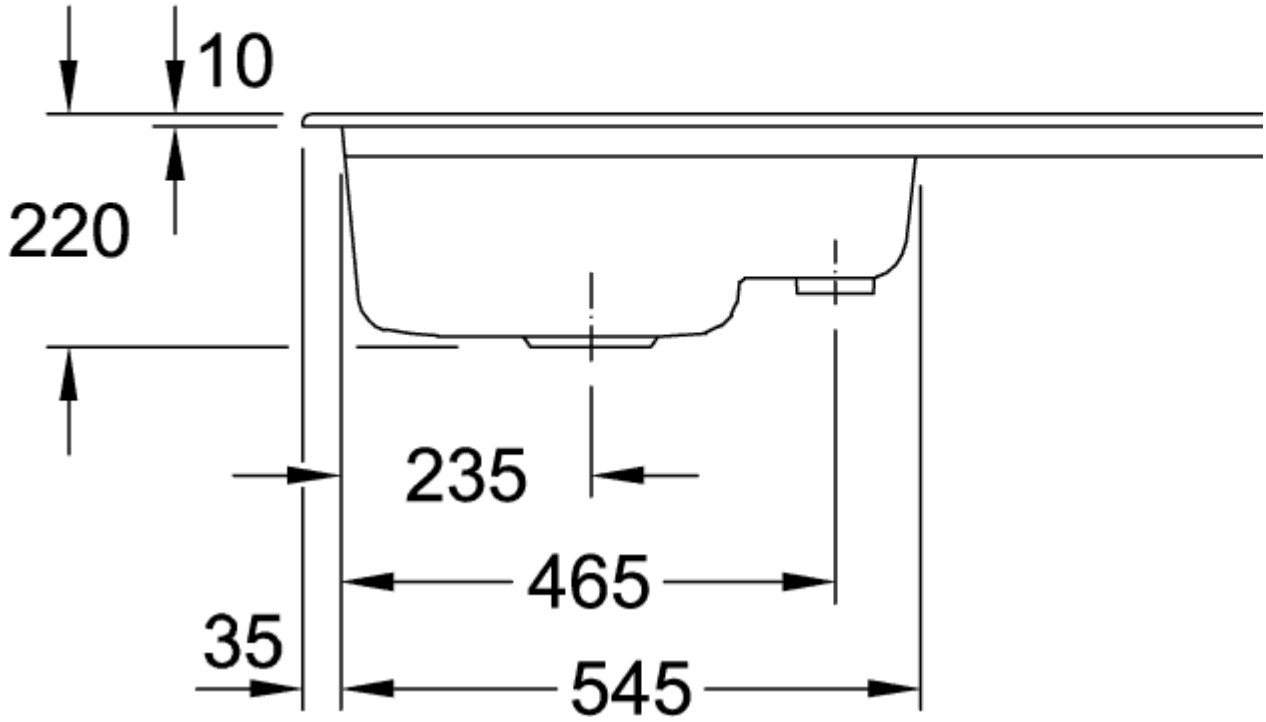
10
220
235
465
35
545
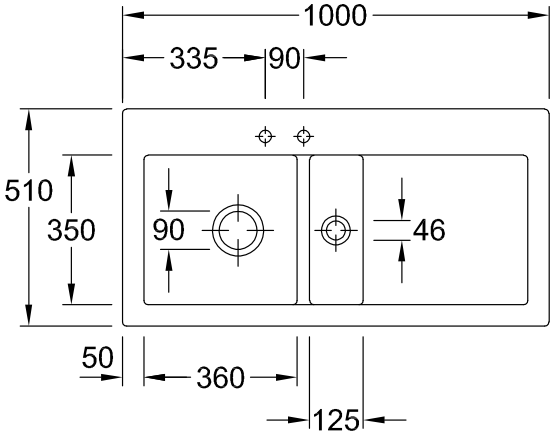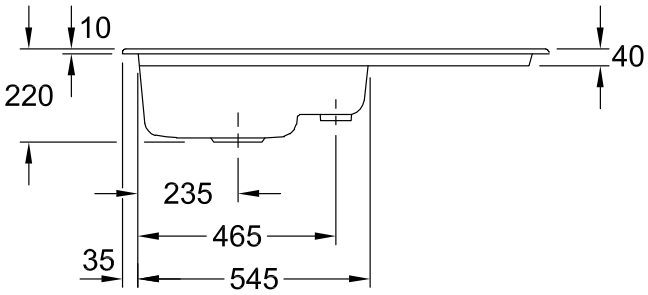
**677201KP**