CONDOR 50 BUILT-IN SINK RECTANGLE

PRODUCT INFORMATION

Article title	Villeroy & Boch Condor 50 Built-in sink, included Strainer bowl, Waste system pop-up, Espresso glossy
Article number	673202KS
Assembly / Assembly type	surface-mounted installation
Assembly instructions	minimum unit width: 50 cm
Scope of delivery	1 x sink , 1 x pop-up waste system 1 x cover cap, round
Interior depth	175
Collection	Condor 50
Colour name	Espresso glossy
Position of main bowl	Basin, reversible
Function of the drain fitting	pop-up waste system

TECHNICAL DRAWINGS

673202KS

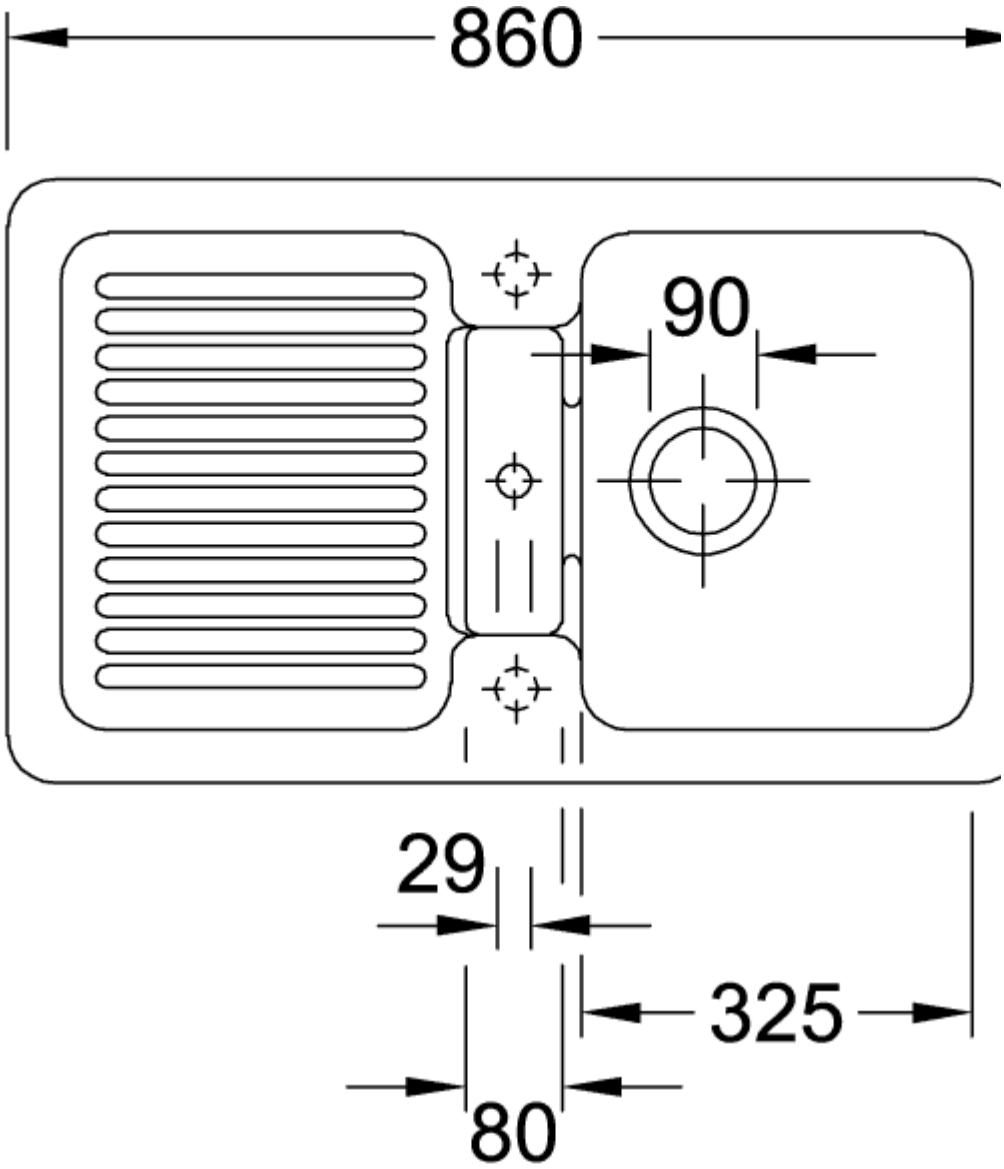
860
90
29
325
80

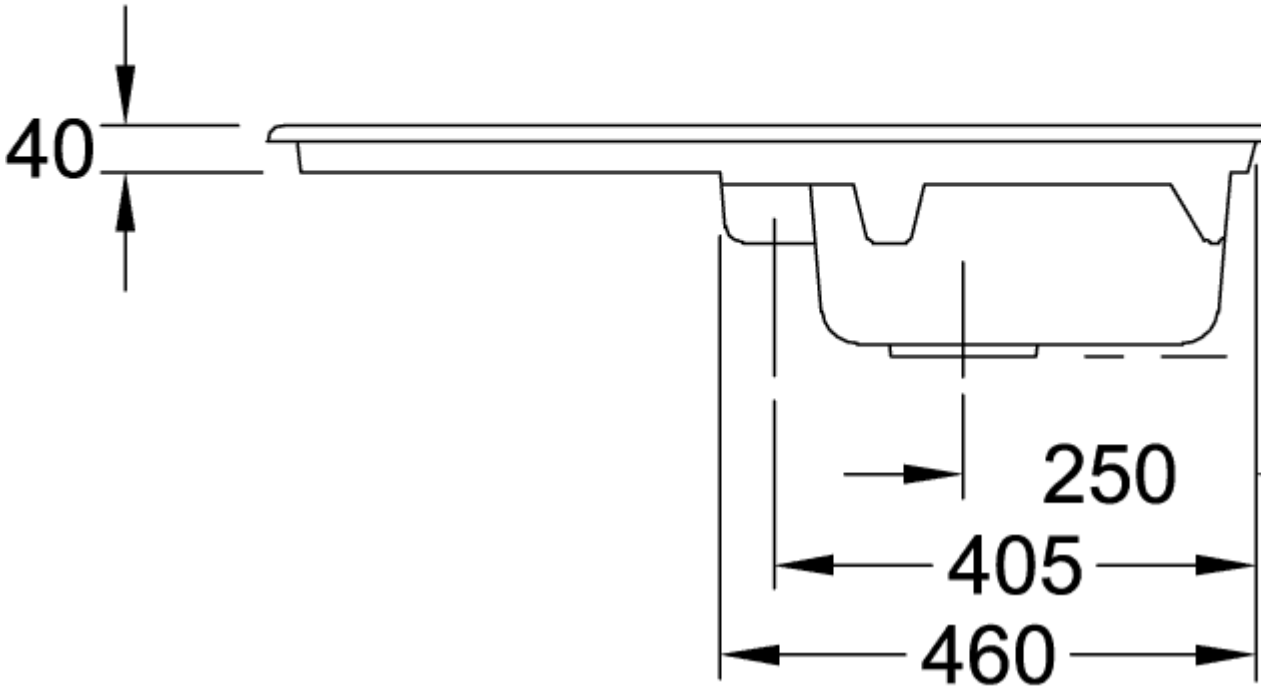
40
250
405
460
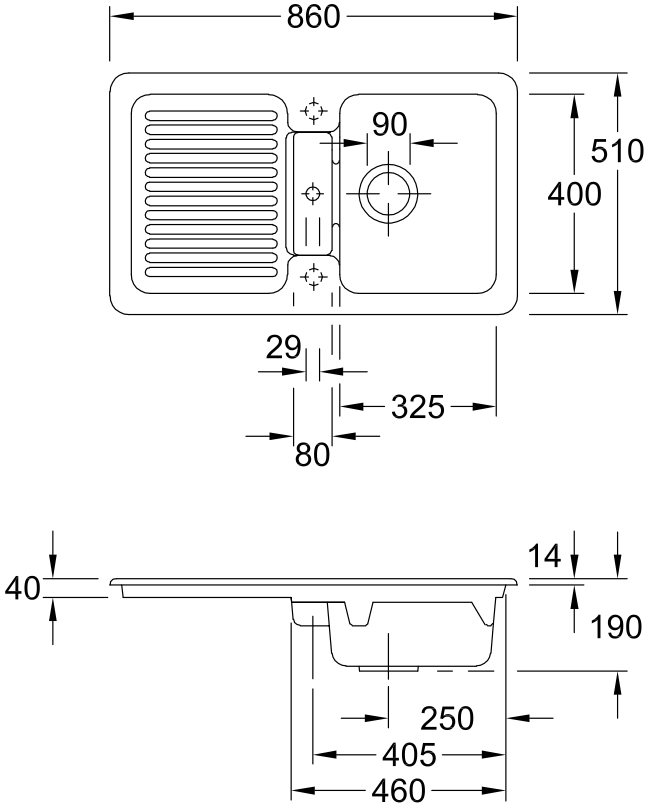
673202KS