SUBWAY 50 FLAT FLUSH-MOUNTED SINK RECTANGLE

PRODUCT INFORMATION

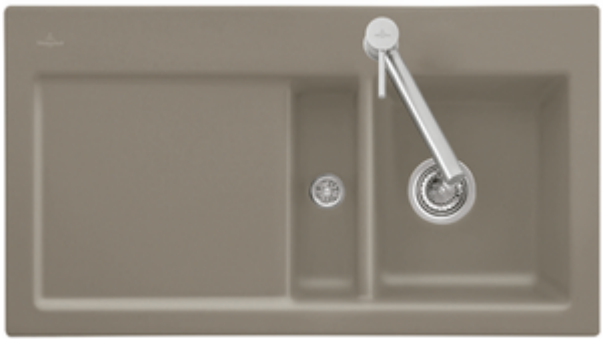

Article title	Villeroy & Boch Subway 50 flat Flush-mounted sink, included Waste system pop-up
Article number	67132FKU
Assembly / Assembly type	flush-fitting installation
Assembly instructions	minimum unit width: 50 cm, Minimum thickness of the countertop when placed with a dishwasher: at least 4 cm|For flush-fit installation in natural stone or artificial stone countertops
Scope of delivery	1 x sink , 1 x pop-up waste system 1 x cover cap, round
Interior depth	200
Collection	Subway 50 flat
Position of main bowl	Basin on right
Function of the drain fitting	pop-up waste system

TECHNICAL DRAWINGS

67132FKU

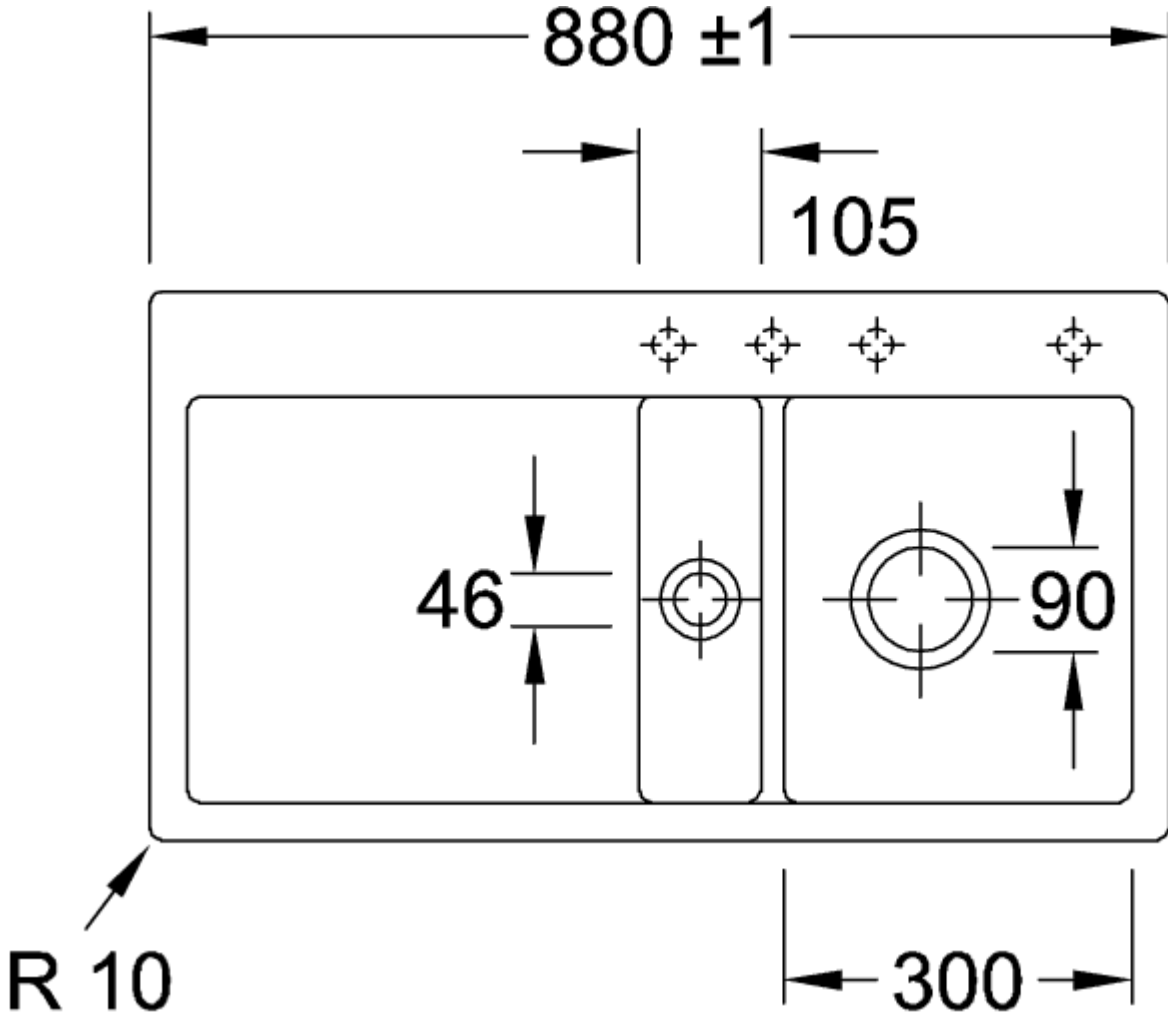
880 ±1
105
46
90
R 10
300

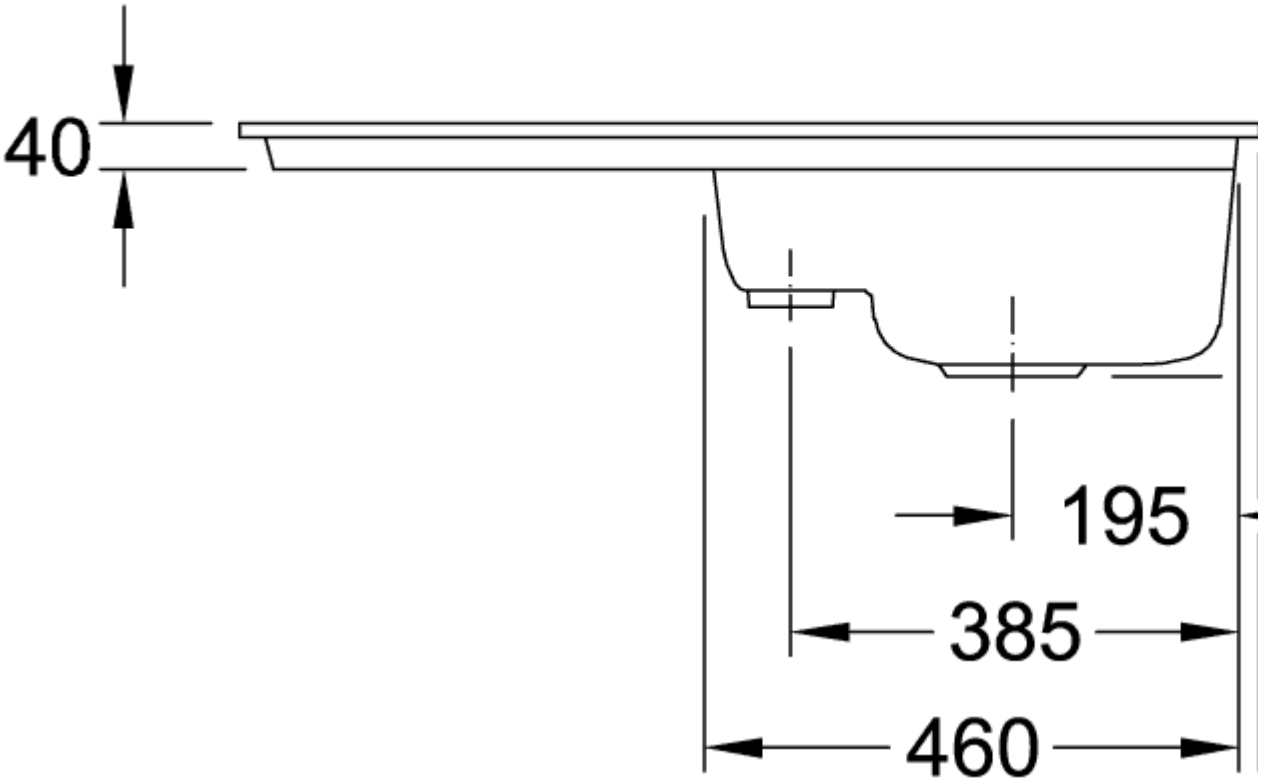
40
195
385
460
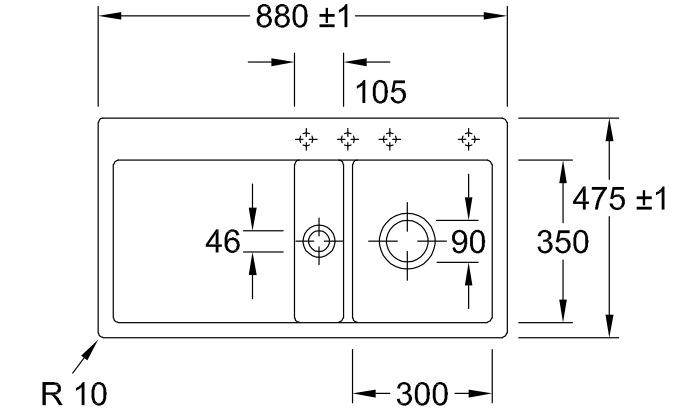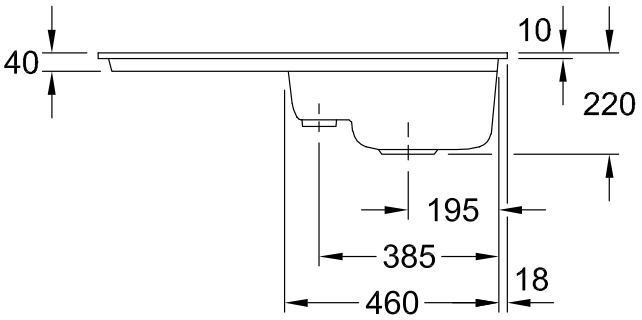
67132FKU