TIMELINE 50 BUILT-IN SINK RECTANGLE

PRODUCT INFORMATION

Article title	Villeroy & Boch Timeline 50 Built-in sink, included Waste system hand-operated, of Ceramic, 900 x 510 mm, Sunrise CeramicPlus
Article number	33070107
Assembly / Assembly type	surface-mounted installation
Assembly instructions	minimum unit width: 50 cm
Scope of delivery	1 x sink , 1 x basket strainer waste
Length in mm	510
Width in mm	900
Height in mm	220
Interior depth	200
Collection	Timeline 50
Material	Ceramic
Colour name	Sunrise CeramicPlus
Other material	Grate: Stainless steel Valve: Stainless steel
Position of main bowl	Basin, reversible
Function of the drain fitting	basket strainer waste
Colour designation	Sunrise
Other colour designations	Grate: Chrome, Valve: Chrome

TECHNICAL DRAWINGS

33070107

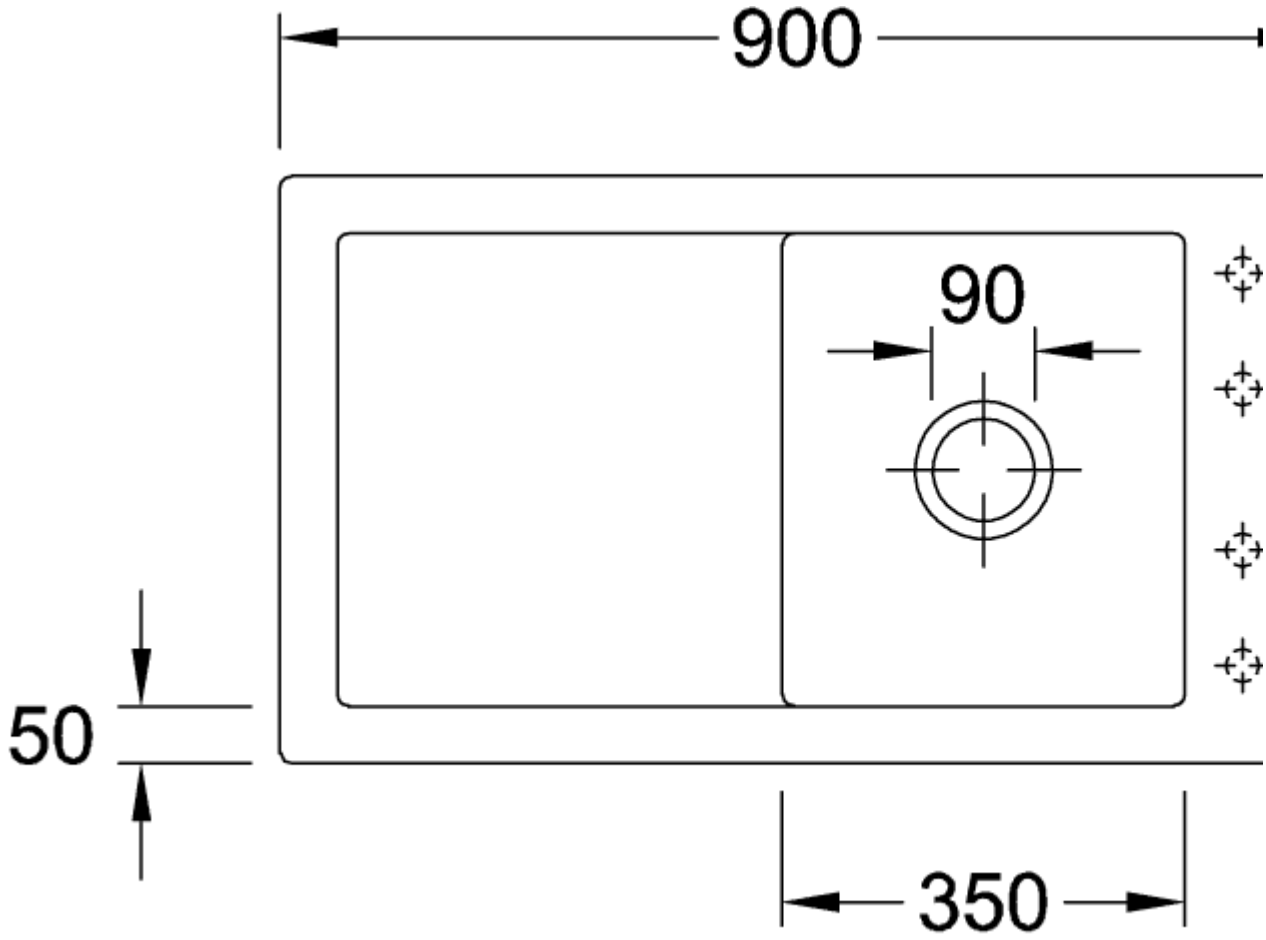
900
90
50
350

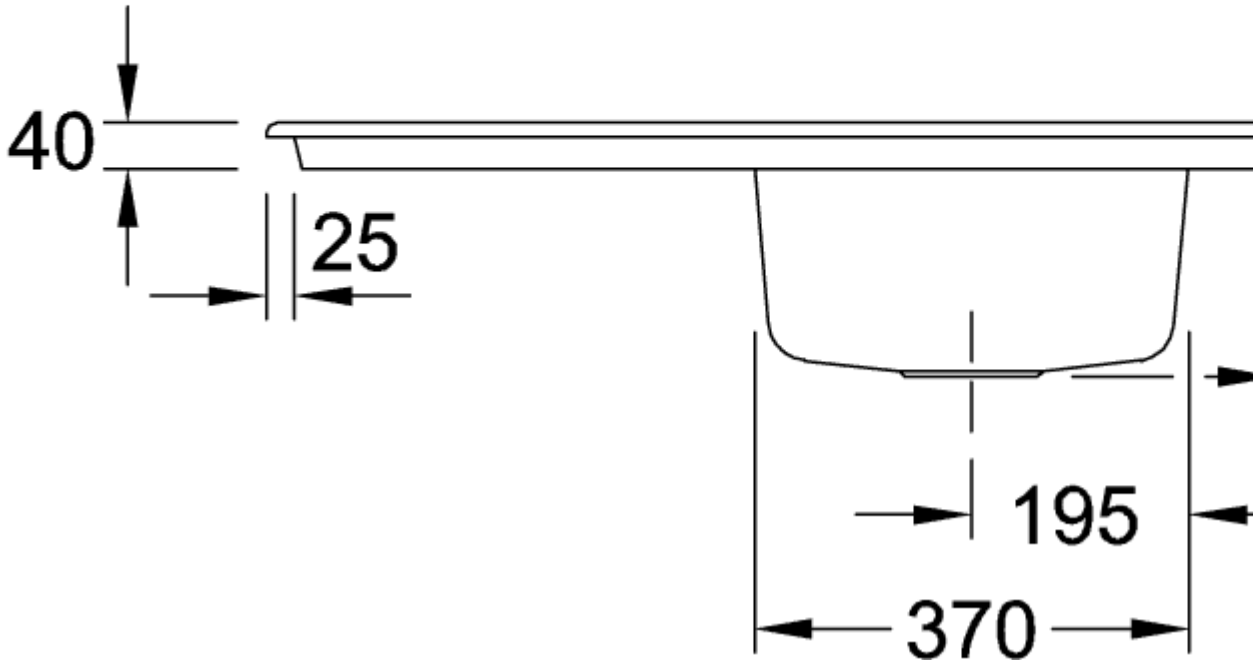
40
25
195
370
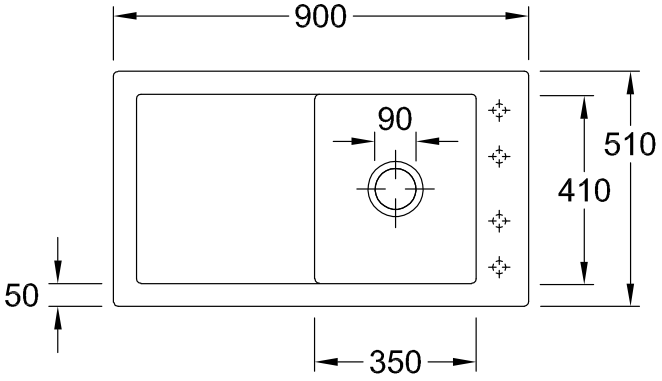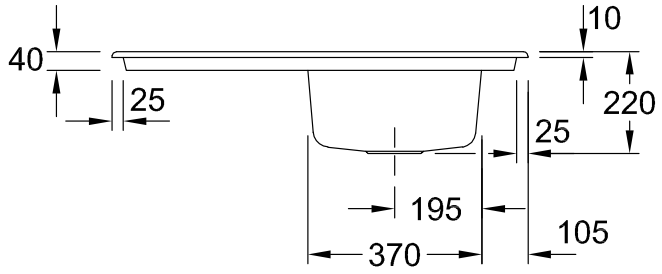
33070107