SUBWAY 60 XR BUILT-IN SINK RECTANGLE

PRODUCT INFORMATION

Article title	Villeroy & Boch Subway 60 XR Built-in sink, included Waste system pop-up
Article number	672102H9
Assembly / Assembly type	surface-mounted installation
Assembly instructions	minimum unit width: 60 cm
Scope of delivery	1 x sink , 1 x pop-up waste system 1 x cover cap, round
Interior depth	200
Collection	Subway 60 XR
Position of main bowl	Basin on right
Function of the drain fitting	pop-up waste system

TECHNICAL DRAWINGS

672102H9

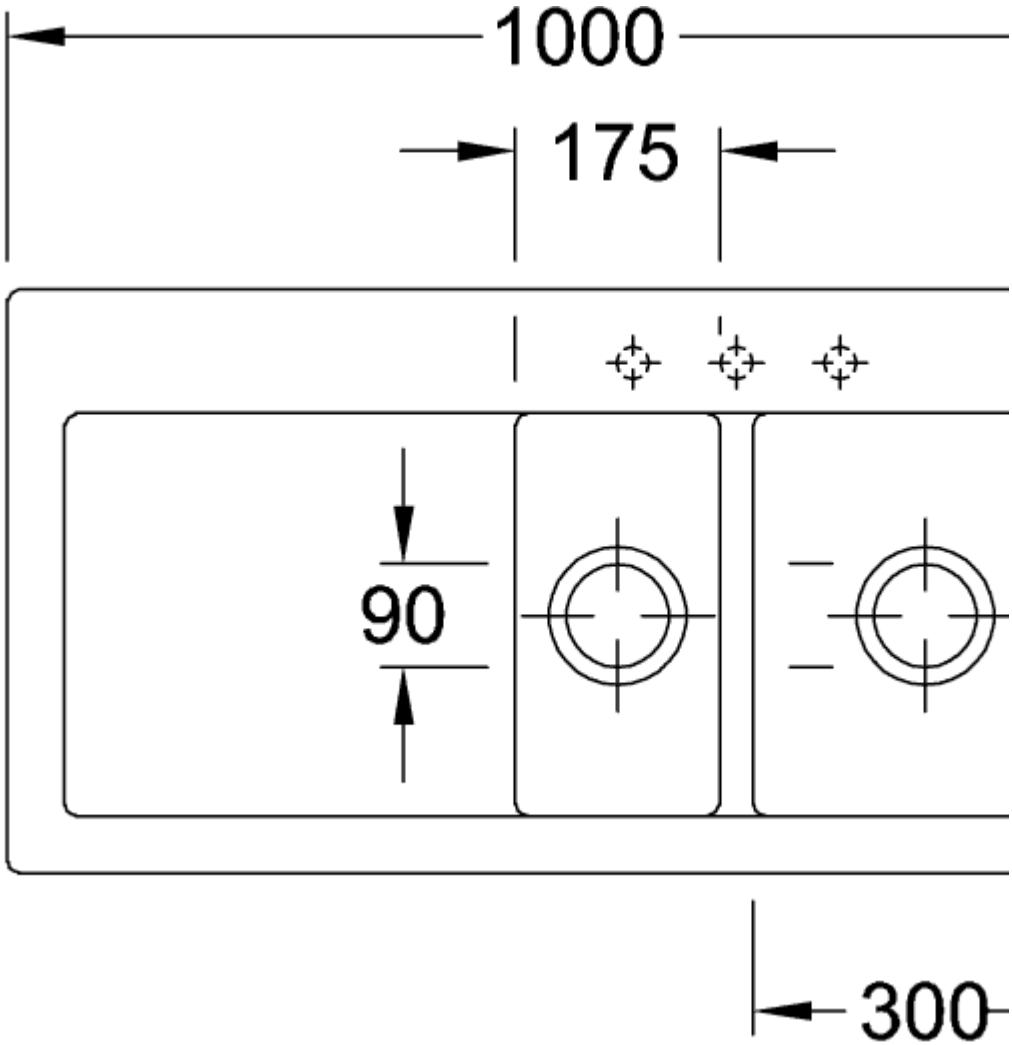
1000
175
90
300

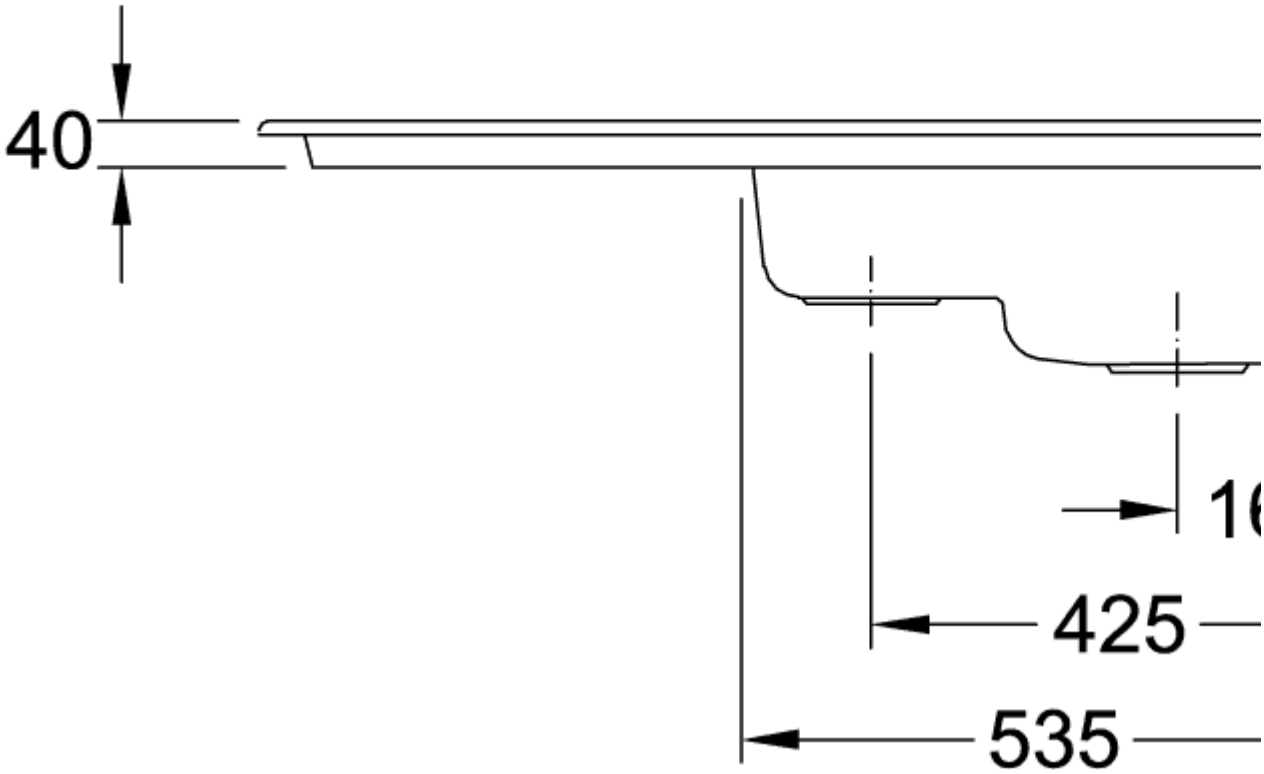
40
425
535
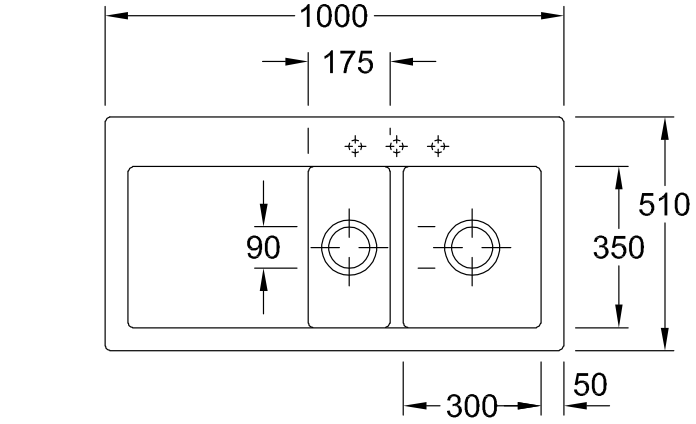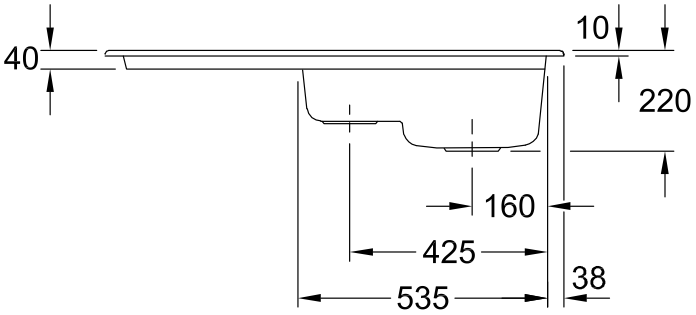
672102H9