SUBWAY 50 BUILT-IN SINK RECTANGLE

PRODUCT INFORMATION

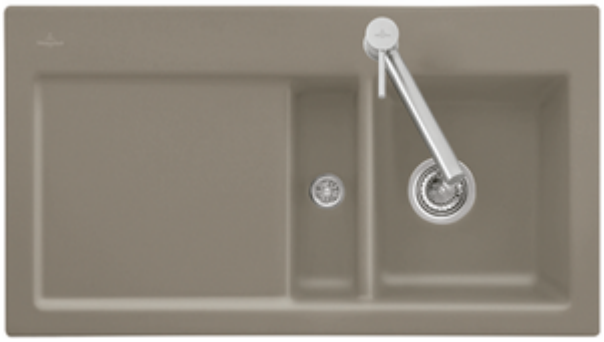

Article title	Villeroy & Boch Subway 50 Built-in sink, included Waste system hand-operated, Espresso glossy
Article number	671301KS
Assembly / Assembly type	surface-mounted installation
Assembly instructions	minimum unit width: 50 cm
Scope of delivery	1 x sink , 1 x basket strainer waste
Interior depth	200
Collection	Subway 50
Colour name	Espresso glossy
Position of main bowl	Basin on right
Function of the drain fitting	basket strainer waste

TECHNICAL DRAWINGS

671301KS

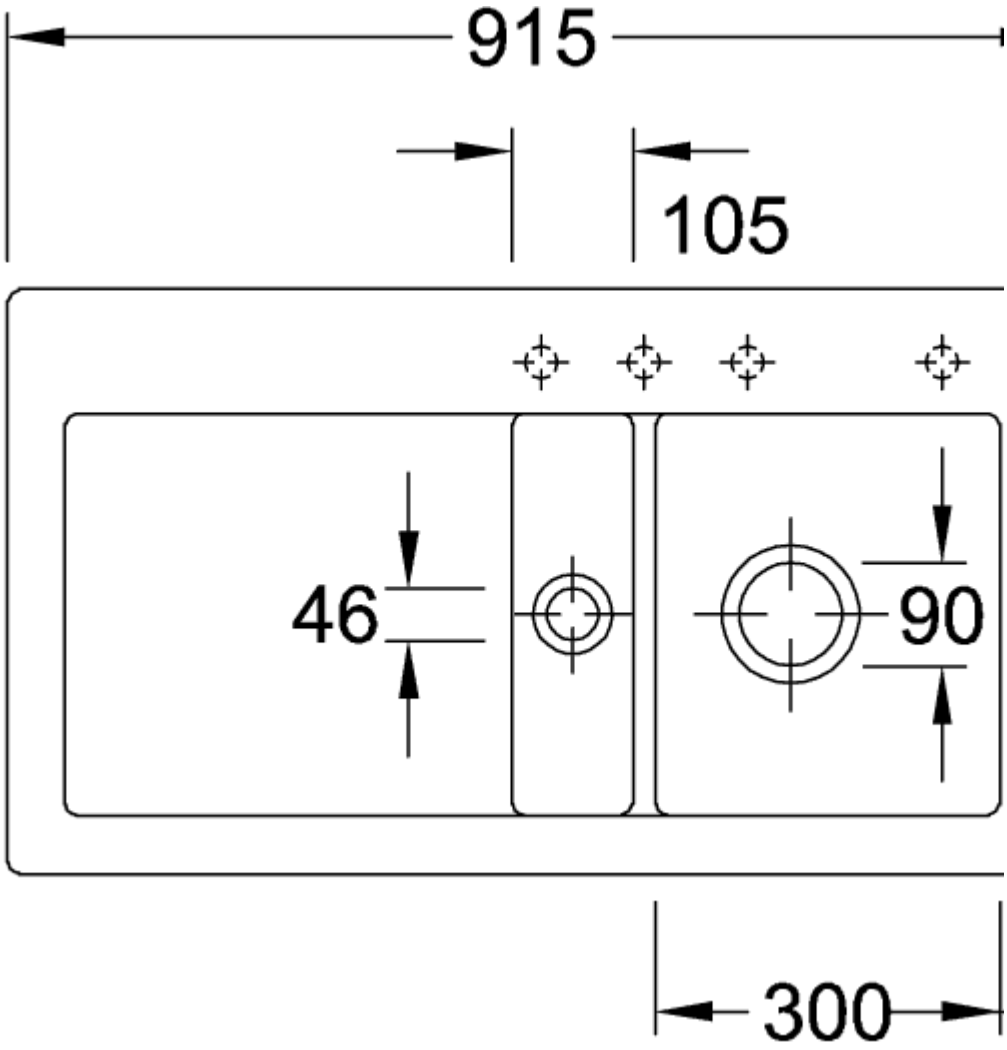
915
105
46
90
300

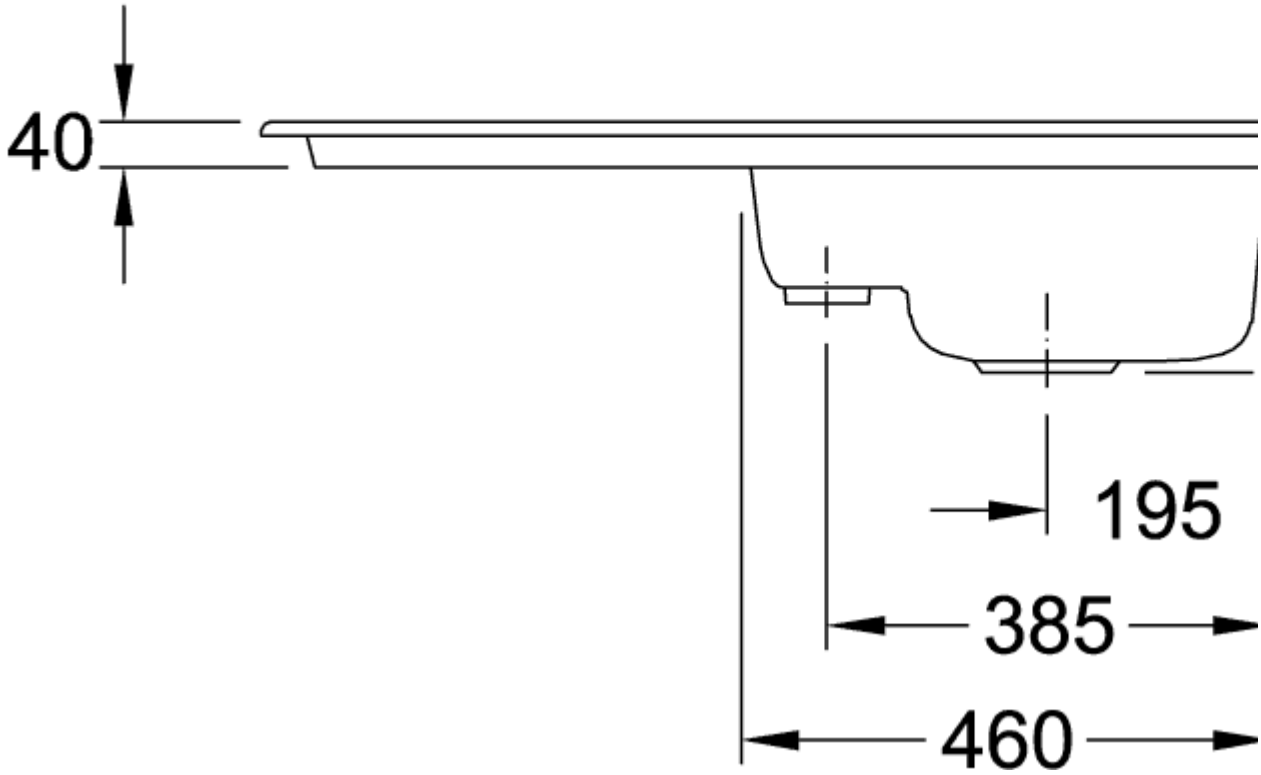
40
195
385
460
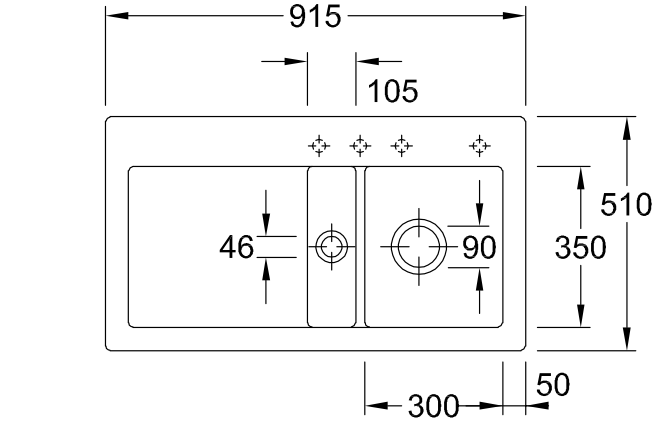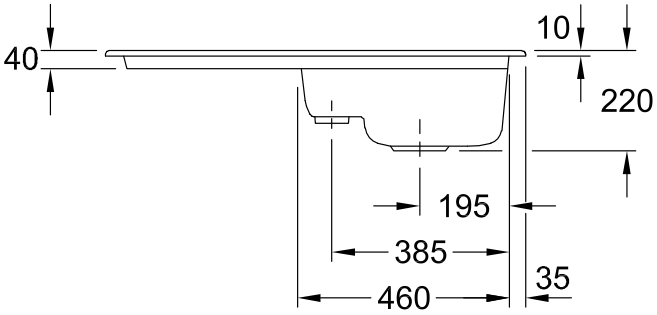
671301KS