CETUS OVAL BATH OVAL

PRODUCT INFORMATION

Article title	Villeroy & Boch Cetus Oval bath, 1750 x 750 mm, White Alpin
Article number	UBQ175CEU7V-01
Assembly / Assembly type	built-in installation
Scope of delivery	1 x oval bath , 2 x bath support frame (self-adhesive), adjustable from 130 - 180 mm
Length in mm	1750
Width in mm	750
Height in mm	496
Interior depth	471
Collection	Cetus
Material	Quaryl®
Colour name	White Alpin
With overflow	Yes
Number of people	2
Shape	Oval
Colour designation	White Alpin
With slip resistance	No
Outlet / outlet	central outlet
Interior form	oval
SilentFlow	No

TECHNICAL DRAWINGS

UBQ175CEU7V-01

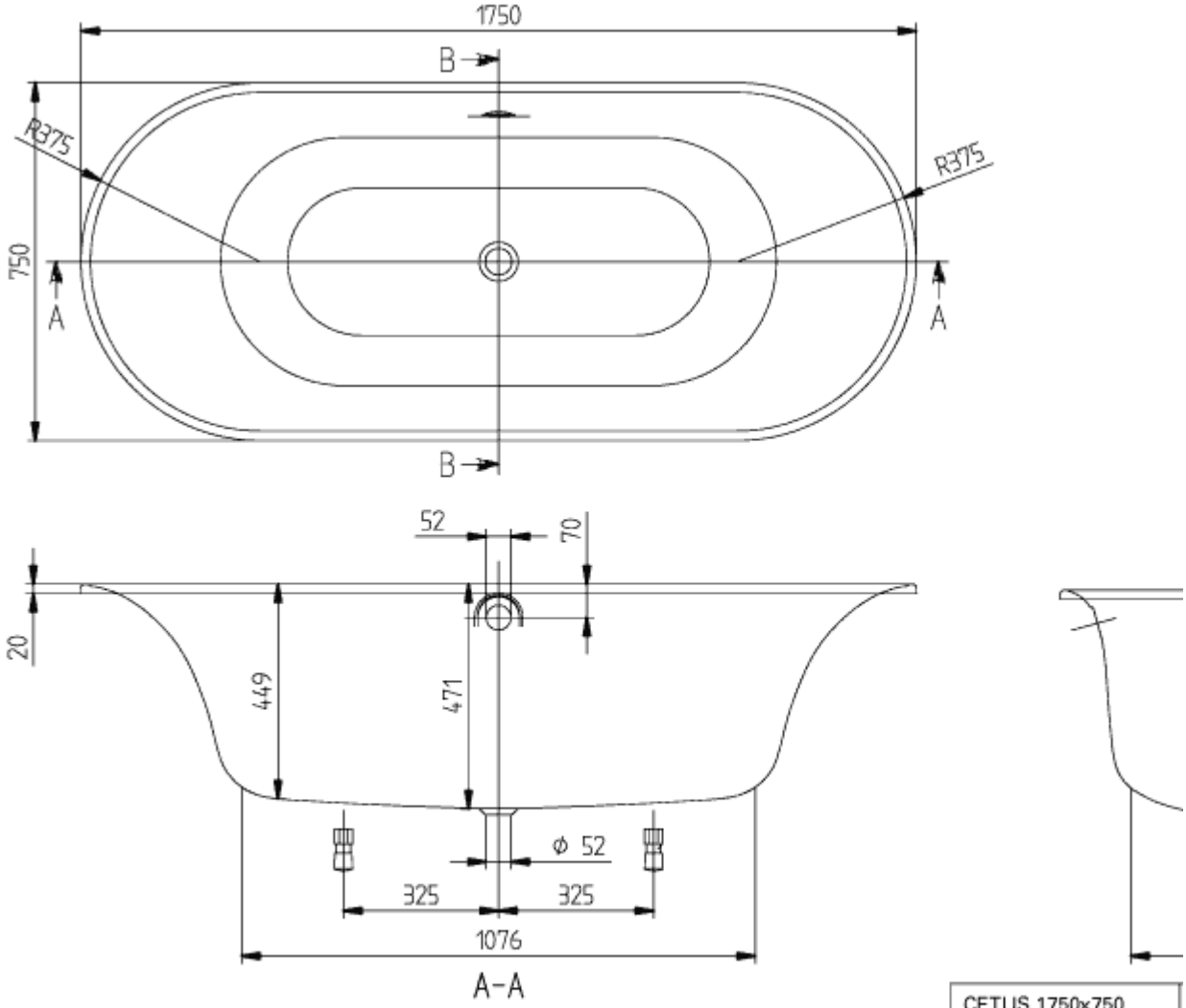

CETUS 1750x750 UBQ175CEU2
V02/ 05-02-2020
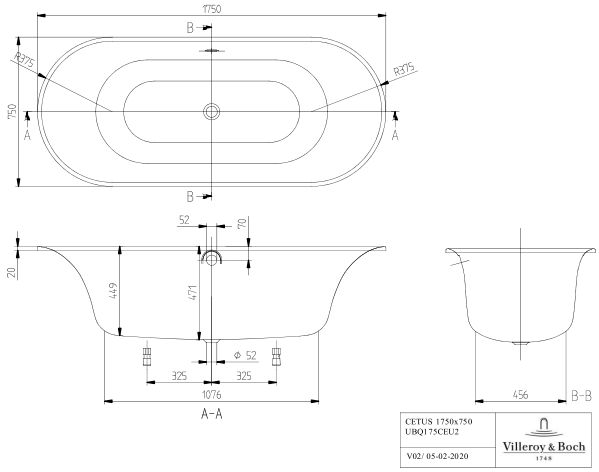
UBQ175CEU7V-01