SUBWAY 2.0 TALL CABINET ANGULAR

PRODUCT INFORMATION

Article title	Villeroy & Boch Subway 2.0 Tall cabinet, 1 drawer, 2 doors, 350 x 1650 x 370 mm, Black Matt Lacquer
Article number	A70810PD
Assembly / Assembly type	wall-mounted
Type of opening	1 drawer, 2 doors
Door hinge	hinges on right
Equipment	2 x door , 1 x pull-out compartment 3 x shelf
Scope of delivery	1 x tall cabinet , 1 x fastening set
Depth in mm	370
Width in mm	350
Height in mm	1650
Collection	Subway 2.0
Function	with SoftClosing
Material front	MDF
Surface of front	Paint
Material body	MDF
Surface of body	Paint
Shape	Angular
Colour designation	Black Matt Lacquer
With lighting	No
Smart home compatible	No

TECHNICAL DRAWINGS

A70810PD

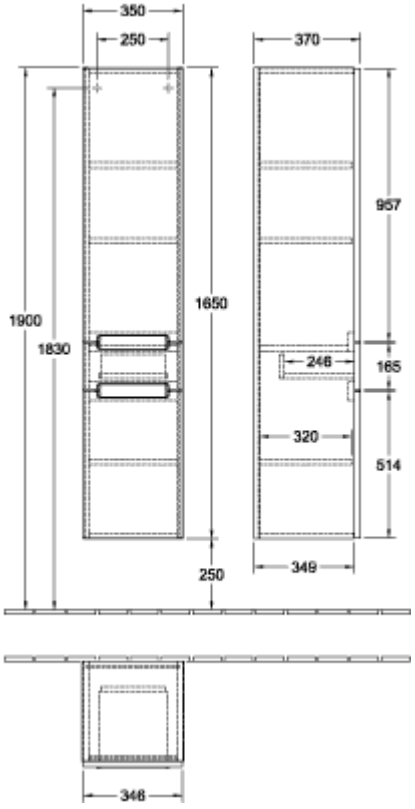
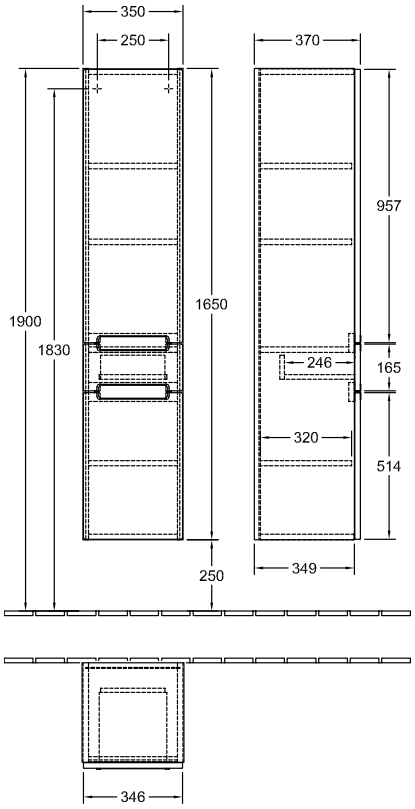
A70810PD