VENTICELLO CISTERN

PRODUCT INFORMATION

Article title	Villeroy & Boch Venticello Cistern, bottom water inlet, White Alpin
Article number	5707A101
Scope of delivery	1 x cistern
Depth in mm	165
Width in mm	383
Height in mm	389
Collection	Venticello
Material	Sanitary ceramics
Colour name	White Alpin
Other material	Push button: ABS Flushing mechanism: Plastic
Other surfaces	Push button: chrome, glossy, Flushing mechanism: glossy
Colour designation	White Alpin
Other colour designations	Push button: Chrome, Flushing mechanism: White Alpin

TECHNICAL DRAWINGS

5707A101

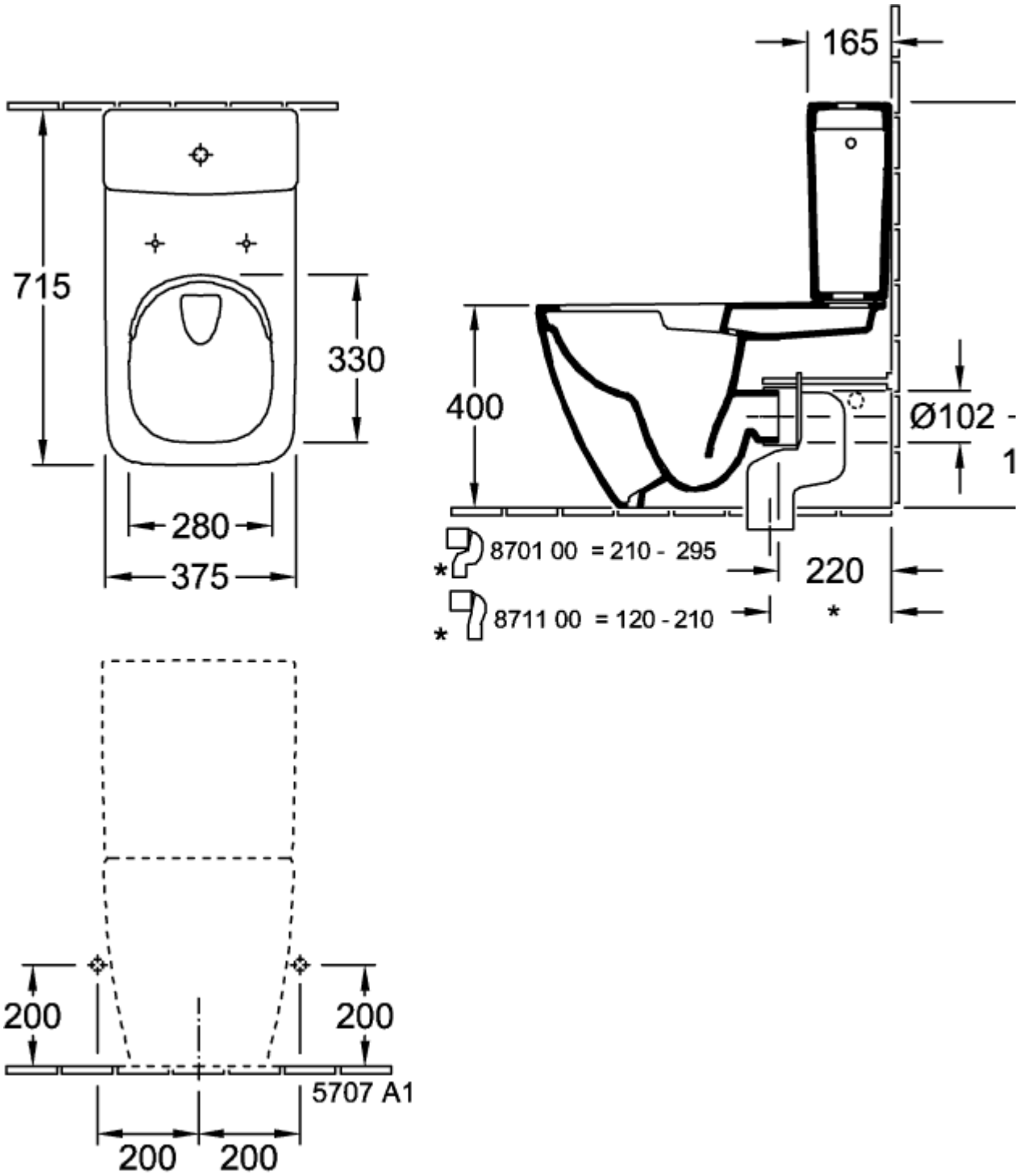

5707A101

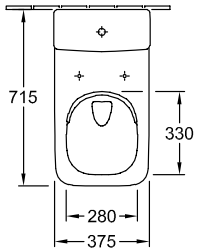
715
330
280
375

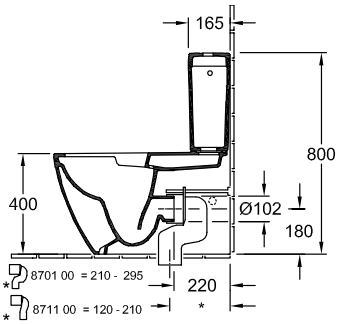
165
800
400
Ø102
180
8701 00 = 210 - 295
220
8711 00 = 120 - 210

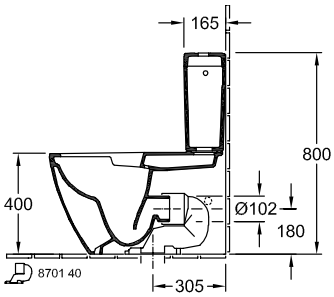
165
800
400
Ø102
180
8701 40
305

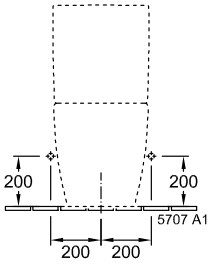
200
200
5707 A1
200
200

5707A101

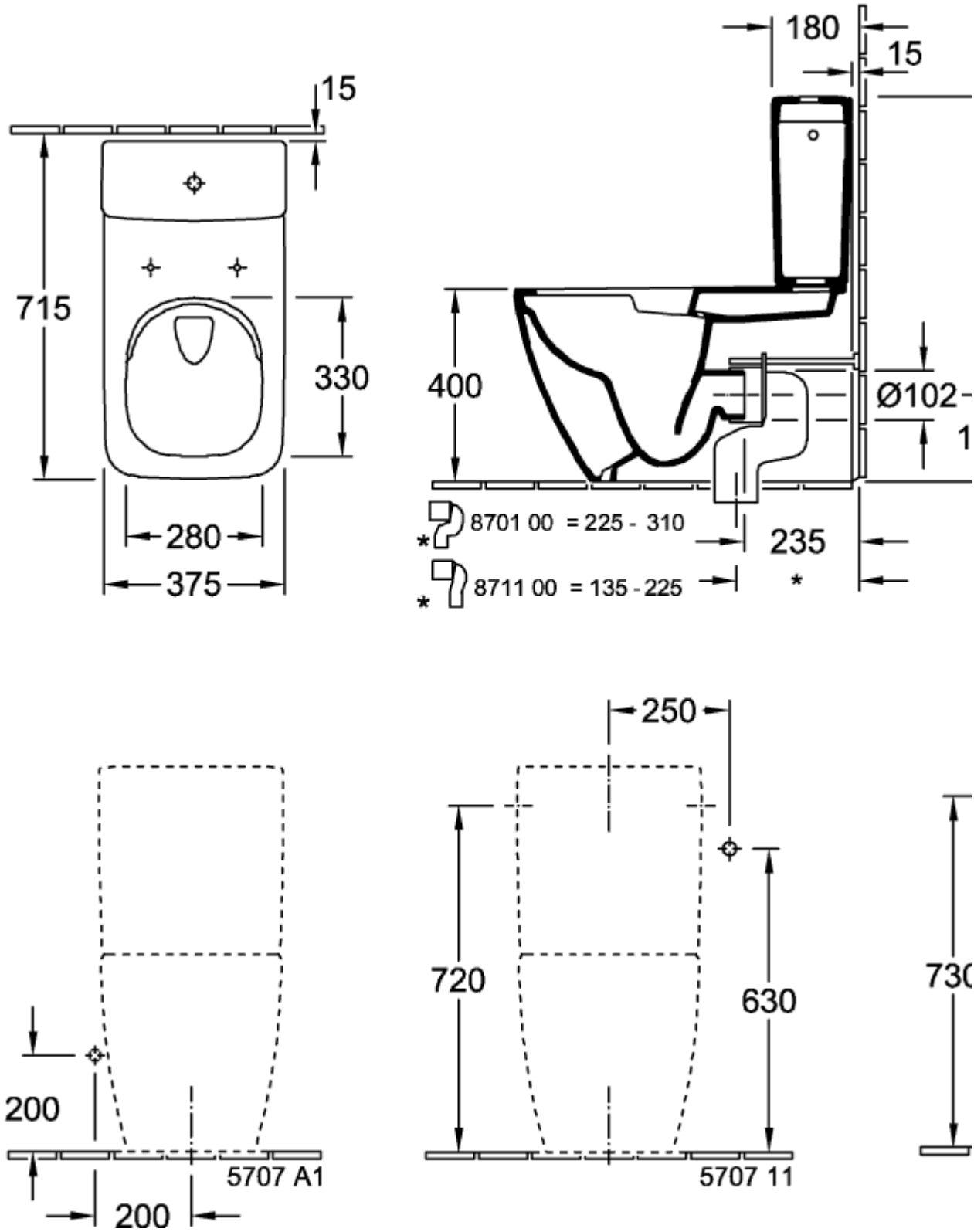
15
715
330
280
375
180
15
400
Ø102
1
8701 00 = 225 - 310
235
8711 00 = 135 - 225
250
720
630
730
200
200
5707 A1
5707 11

5707A101

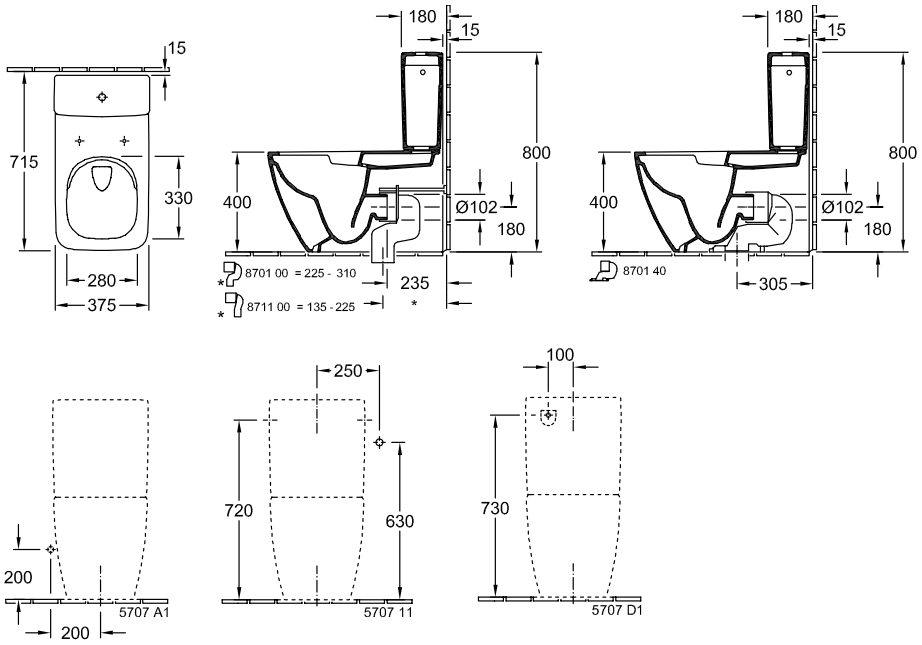
15
715
330
280
375
180
15
800
400
Ø102
180
8701 00 = 225 - 310
235
8711 00 = 135 - 225
180
15
800
400
Ø102
180
8701 40
305
250
720
630
5707 11
100
730
5707 D1
200
5707 A1
200

5707A101

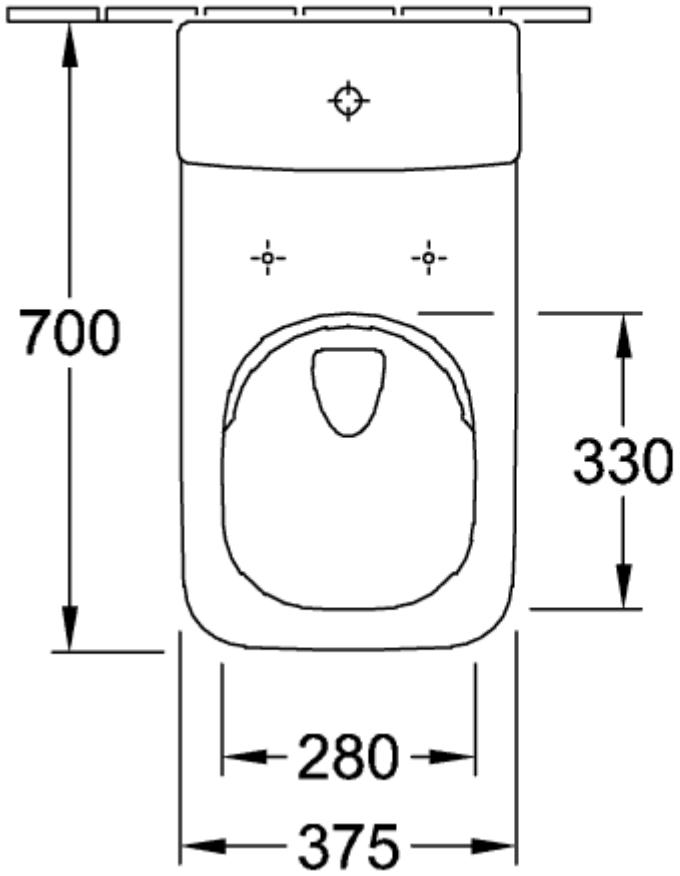
700
330
280
375

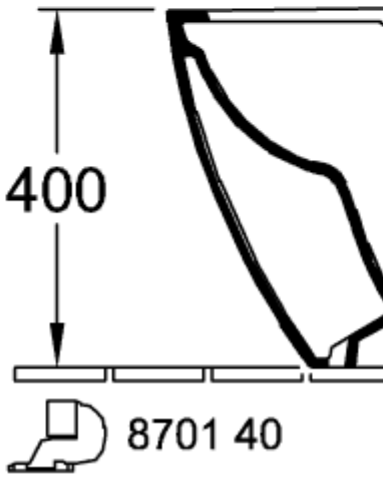
400
8701 40

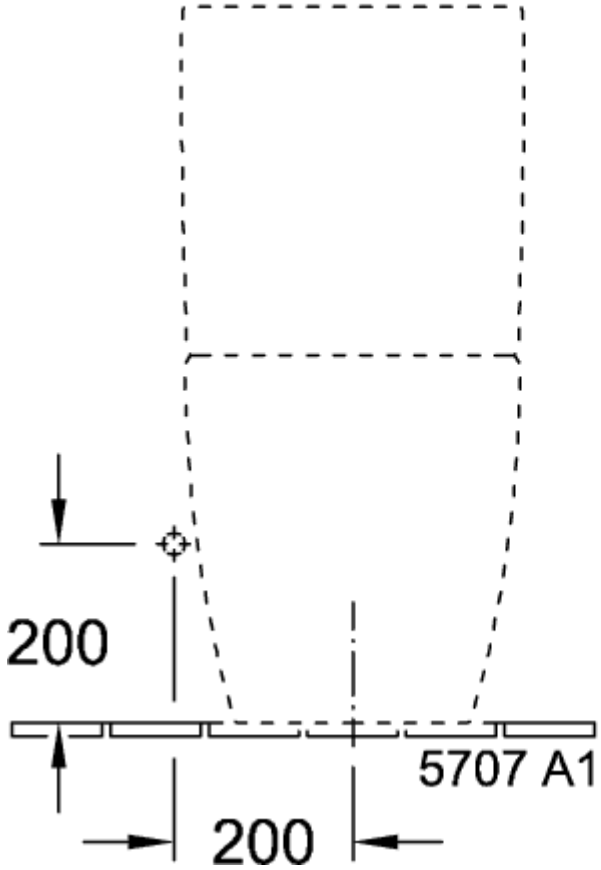
200
5707 A1
200
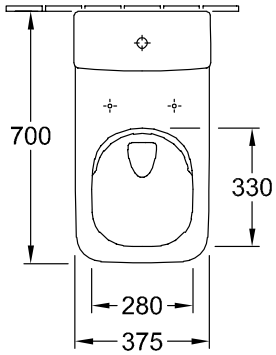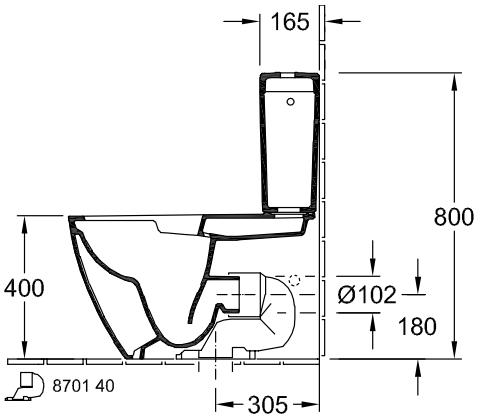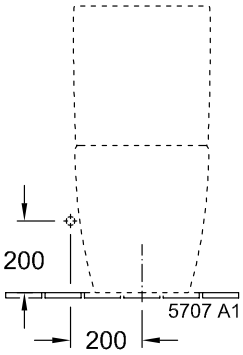
5707A101