SUBWAY 2.0 WASHDOWN TOILET FOR CLOSE-COUPLED WC-SUITE, RIMLESS OVAL

PRODUCT INFORMATION

Article title	Villeroy & Boch Subway 2.0 Washdown toilet for close-coupled WC-suite, rimless, floor-standing, White Alpin CeramicPlus
Article number	5617R9R1
Assembly / Assembly type	floor-standing
Assembly instructions	with recess at the side for water inlet from below
Depth in mm	700
Width in mm	370
Height in mm	400
Collection	Subway 2.0
Innovative flushing technology (with TwistFlush)	No
Flush volume l	3 / 4,5 l
Wall-mounted - floor-standing	floor-standing
Material	Sanitary ceramics
surface	glossy
Colour name	White Alpin CeramicPlus
Shape	Oval
Colour designation	White Alpin
Antibacterial surface (with AntiBac)	No
Easy surface cleaning (CeramicPlus)	Yes
Rimless (mit DirectFlush)	Yes
Flush type	Washdown toilet
Integrated freshness solution (with ViFresh)	No
Outlet / outlet	horizontal outlet

TECHNICAL DRAWINGS

5617R9R1

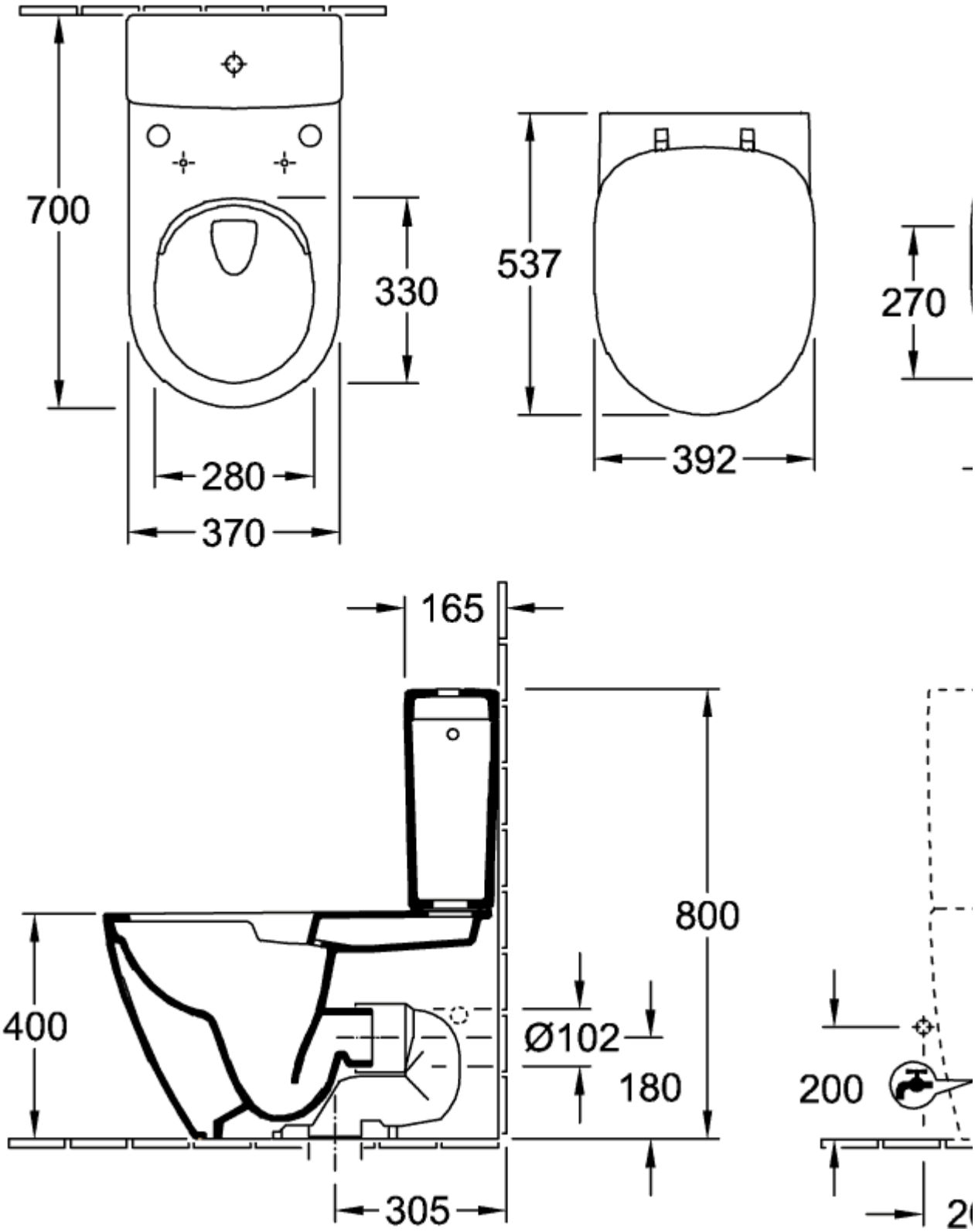

5617R9R1

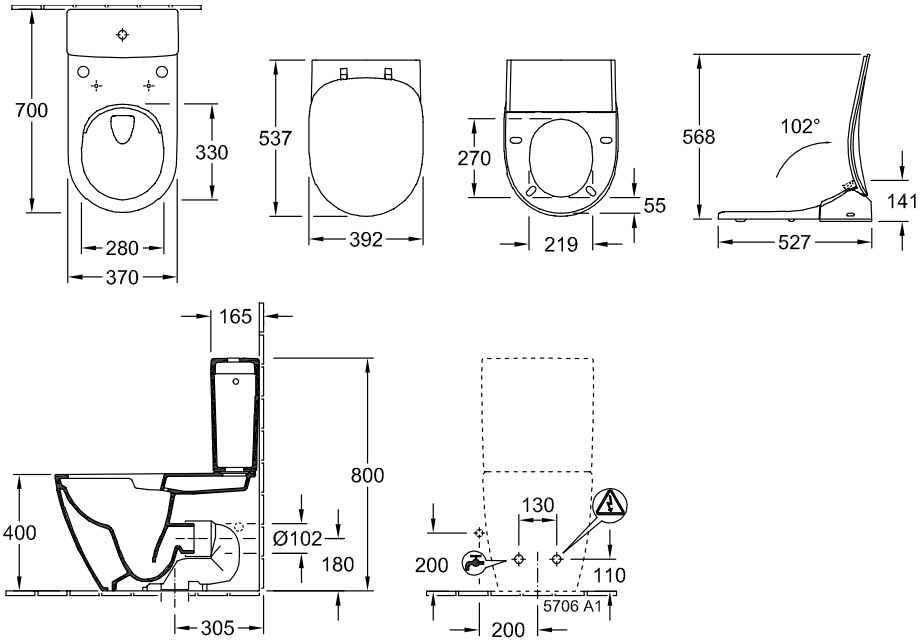
700
330
280
370
537
392
270
55
219
568
102°
141
527
165
800
400
Ø102
180
305
130
200
110
5706 A1
200