SUBWAY 2.0 WASHDOWN TOILET, RIMLESS OVAL

PRODUCT INFORMATION

Article title	Villeroy & Boch Subway 2.0 Washdown toilet, rimless, wall-mounted, White Alpin CeramicPlus
Article number	5614R5R1
Assembly / Assembly type	wall-mounted
Assembly instructions	not suitable for installation with flush valves
Depth in mm	565
Width in mm	375
Height in mm	350
Collection	Subway 2.0
Suitable for	Concealed cistern
Innovative flushing technology (with TwistFlush)	No
Flush volume l	3 / 4,5 l
Wall-mounted - floor-standing	wall-mounted
Material	Sanitary ceramics
surface	glossy
Colour name	White Alpin CeramicPlus
Shape	Oval
Colour designation	White Alpin
Antibacterial surface (with AntiBac)	No
Easy surface cleaning (CeramicPlus)	Yes
Rimless (mit DirectFlush)	Yes
Flush type	Washdown toilet
Integrated freshness solution (with ViFresh)	No
Outlet / outlet	horizontal outlet

TECHNICAL DRAWINGS

5614R5R1

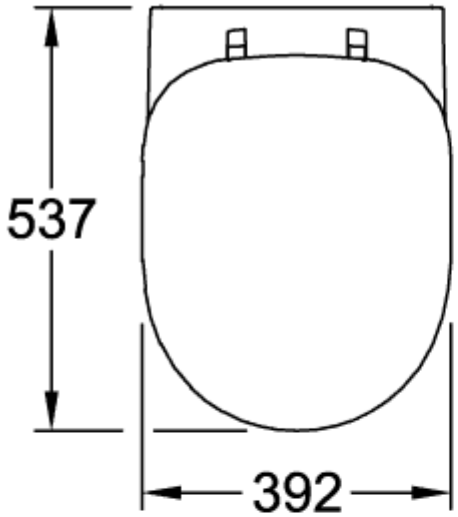

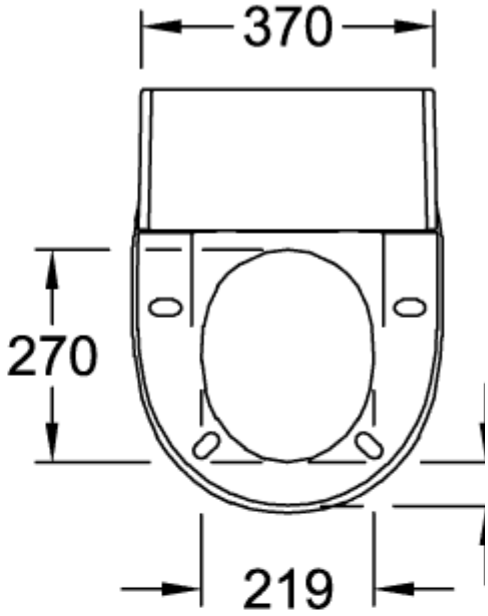

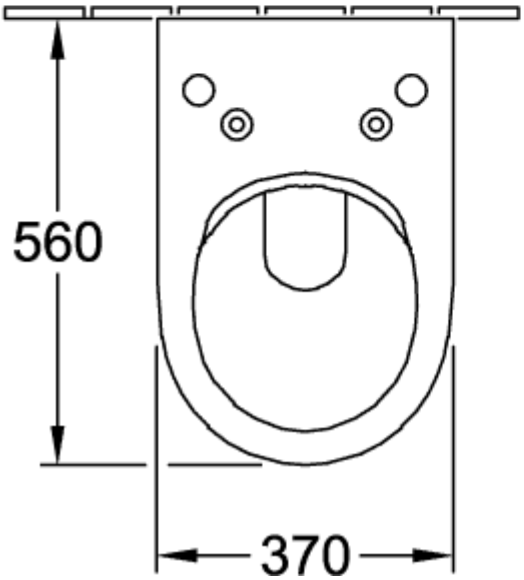

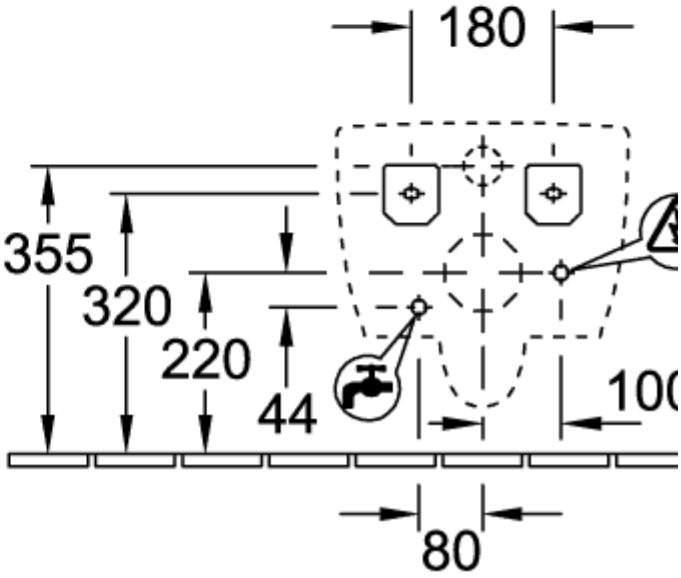

5614R5R1

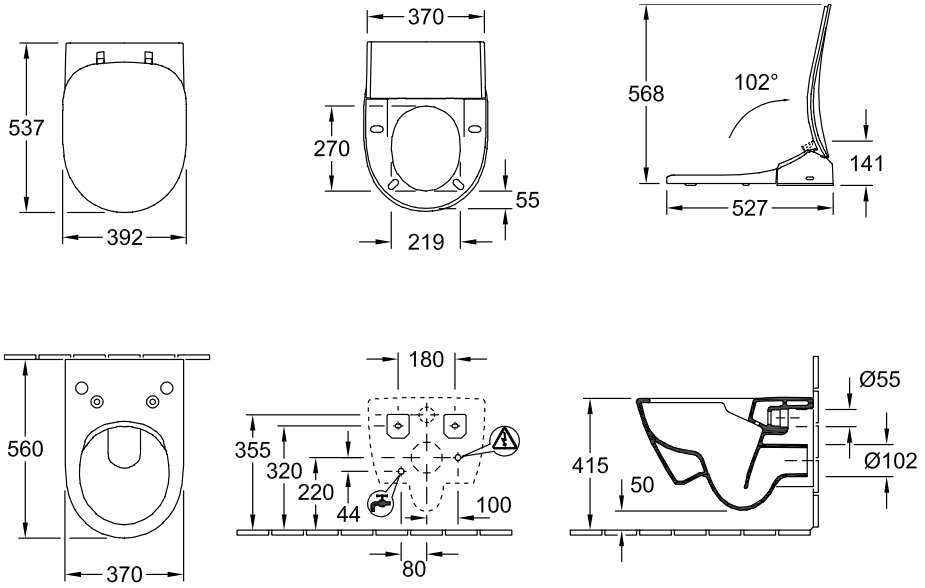

5614R5R1

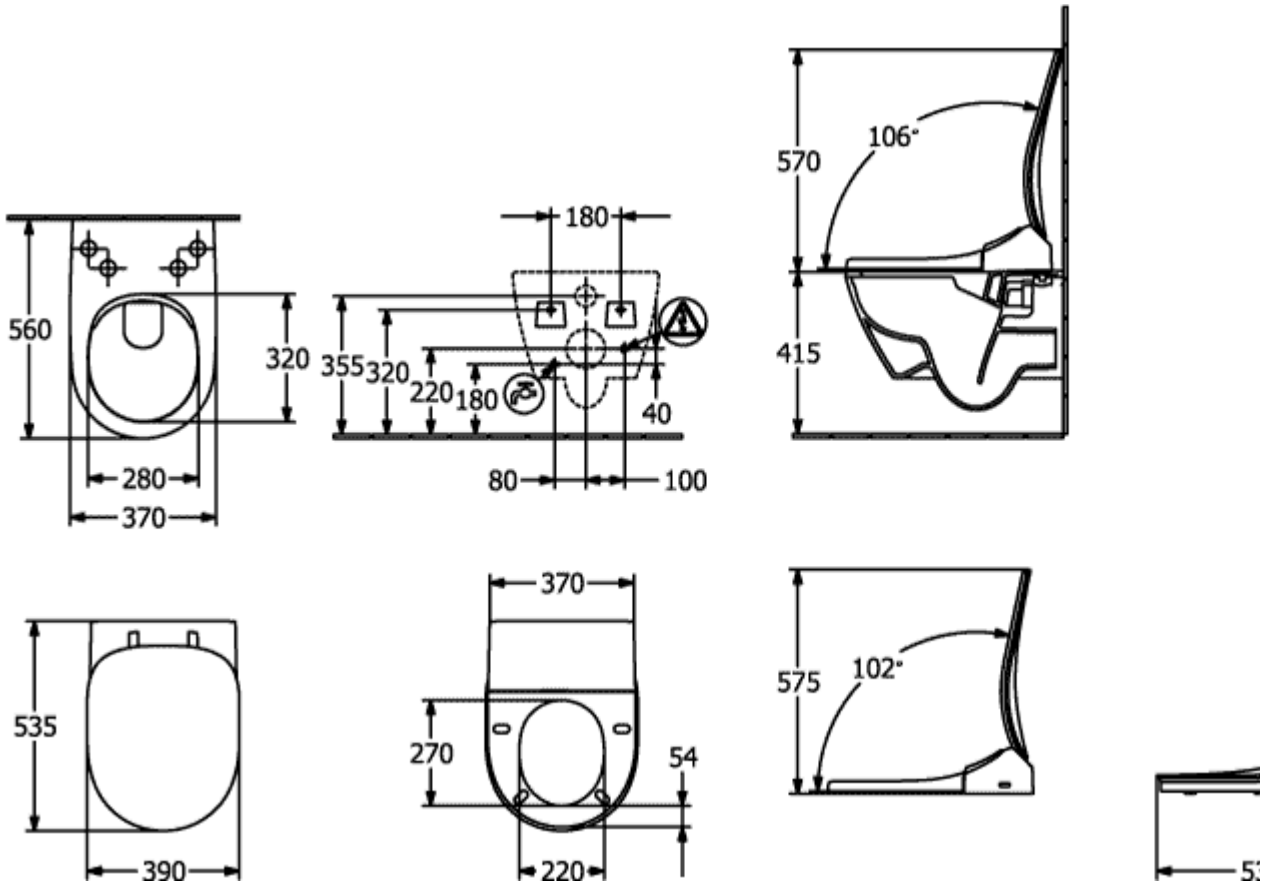

5614R5R1

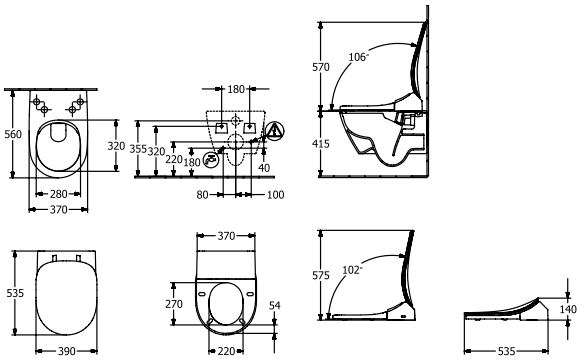

5614R5R1

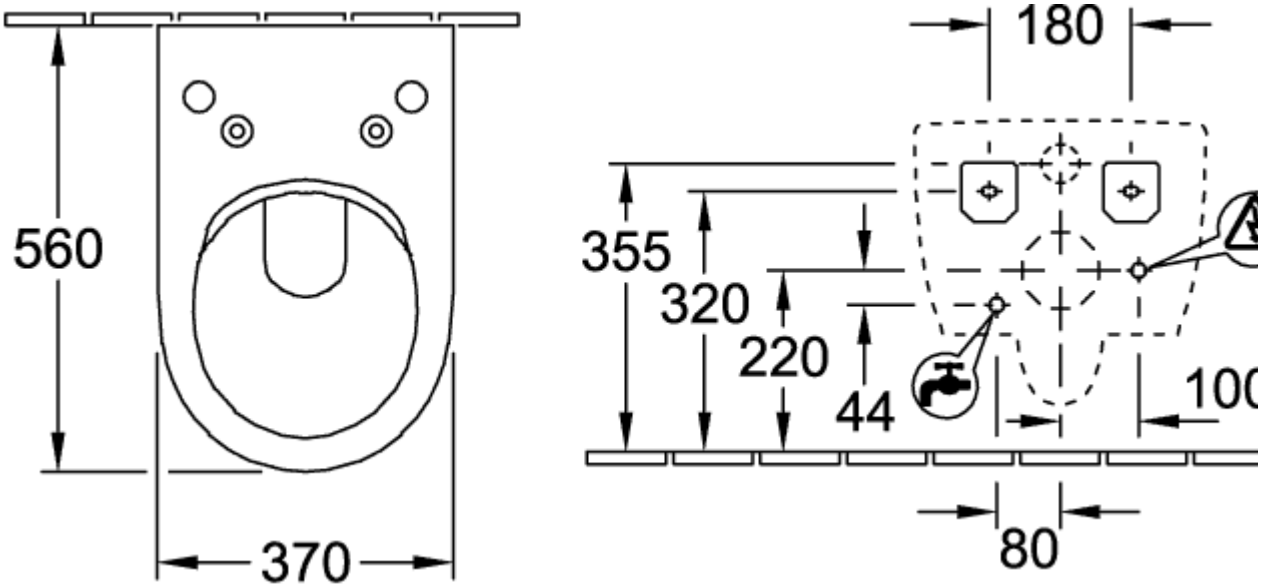
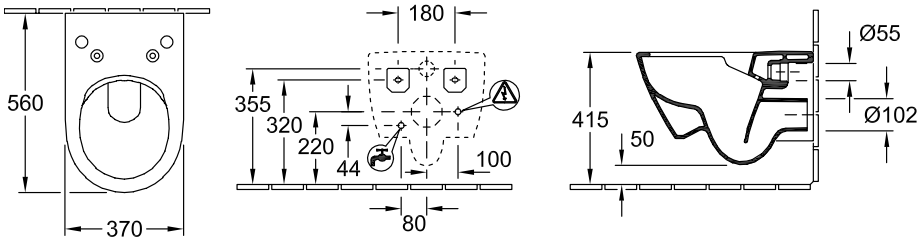
5614R5R1