O.NOVO HANDWASHBASIN COMPACT OVAL

PRODUCT INFORMATION

Article title	Villeroy & Boch O.novo Handwashbasin Compact, 450 x 350 x 170 mm, White Alpin, without overflow
Article number	53604601
Assembly / Assembly type	wall-mounted
Scope of delivery	1 x handwashbasin
Depth in mm	350
Width in mm	450
Height in mm	170
Interior depth	109
Collection	O.novo
Tap fitting / Tap hole information	Please note: unclosable outlet valve must be used with models without overflow
Suitable for	3-hole mixer
Material	Sanitary ceramics
surface	glossy
Colour name	White Alpin
With overflow	No
Shape	Oval
Colour designation	White Alpin
Antibacterial surface (with AntiBac)	No
Easy surface cleaning (CeramicPlus)	No
Number of tap holes punched through	1
Number of tap holes pre-drilled	2
Number of bowls	1

TECHNICAL DRAWINGS

53604601

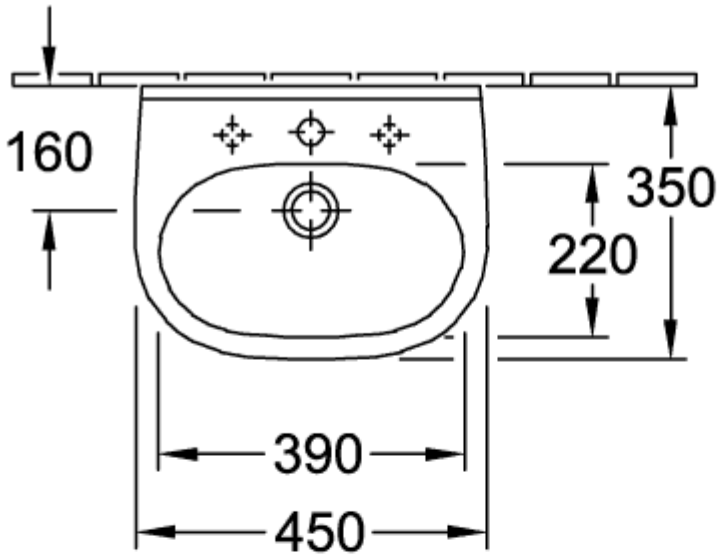

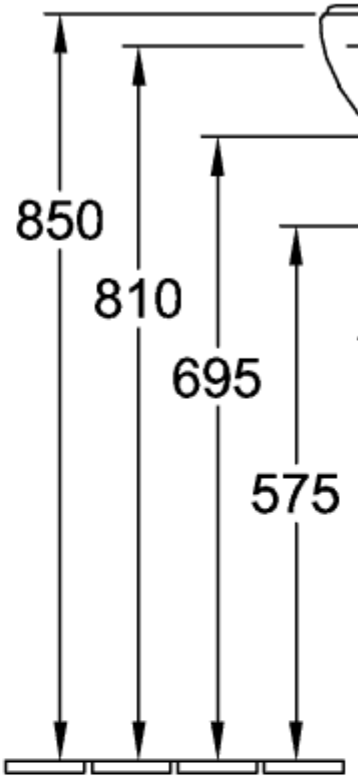

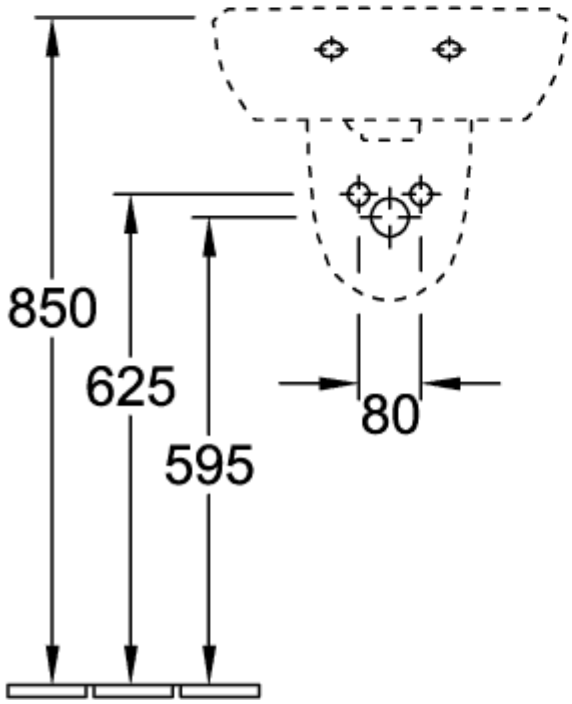

53604601

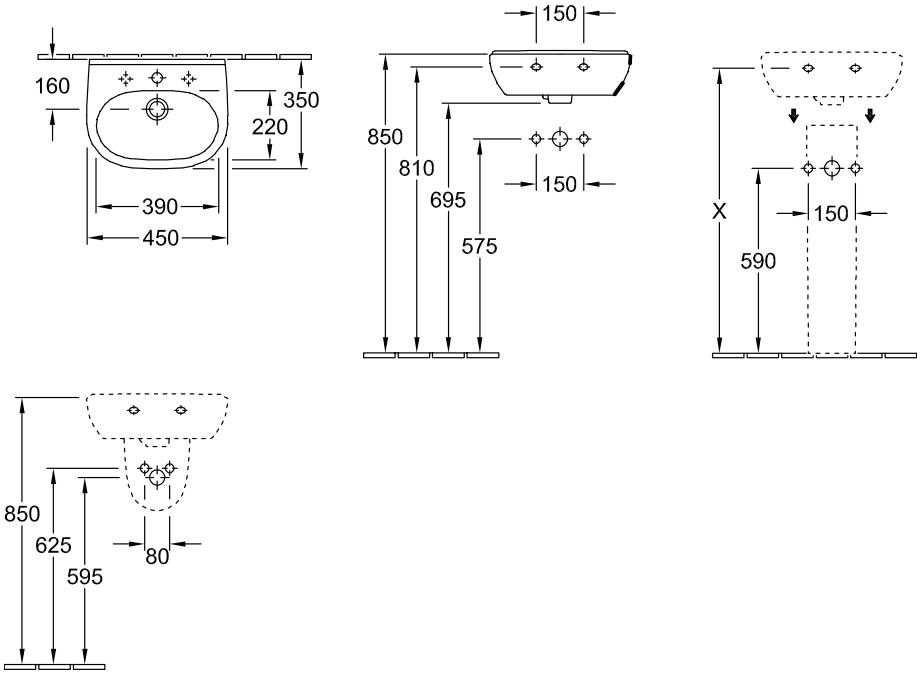
160
350
220
390
450
150
850
810
695
575
150
X
150
590
850
625
595
80

53604601

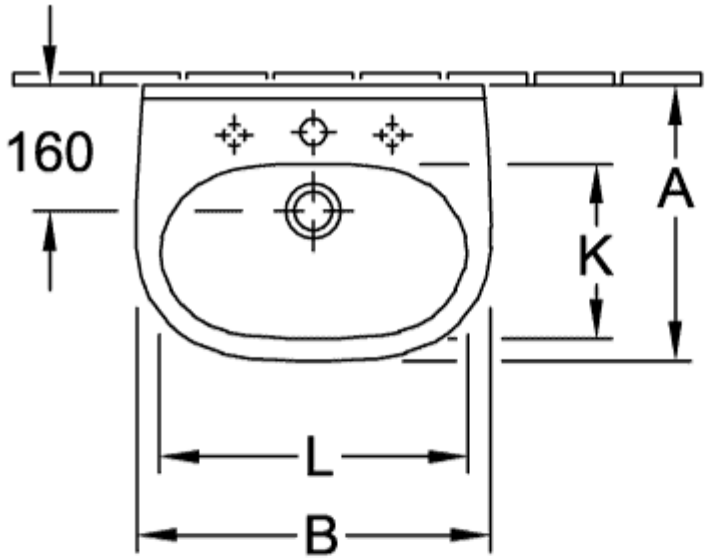

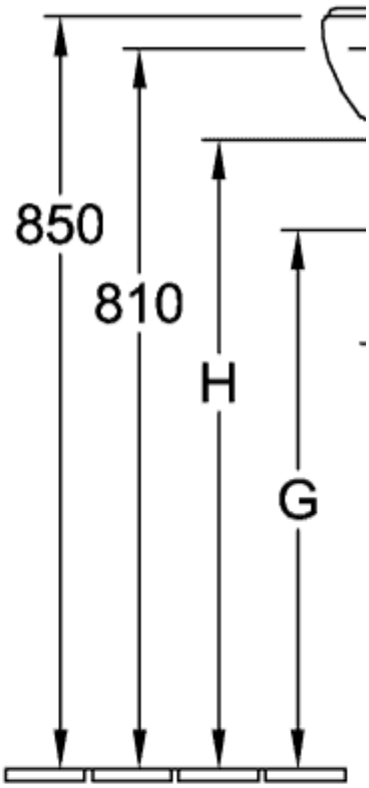

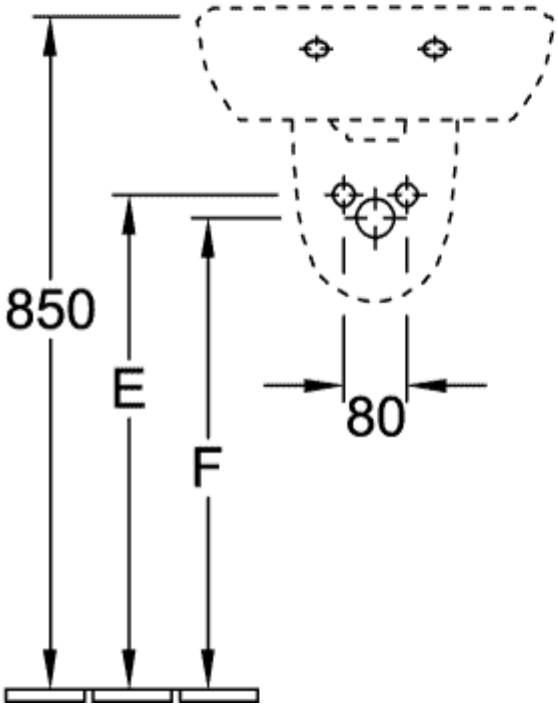

5360 45 / 46 / 47 /
5360 50 / 51 / 52 /

53604601

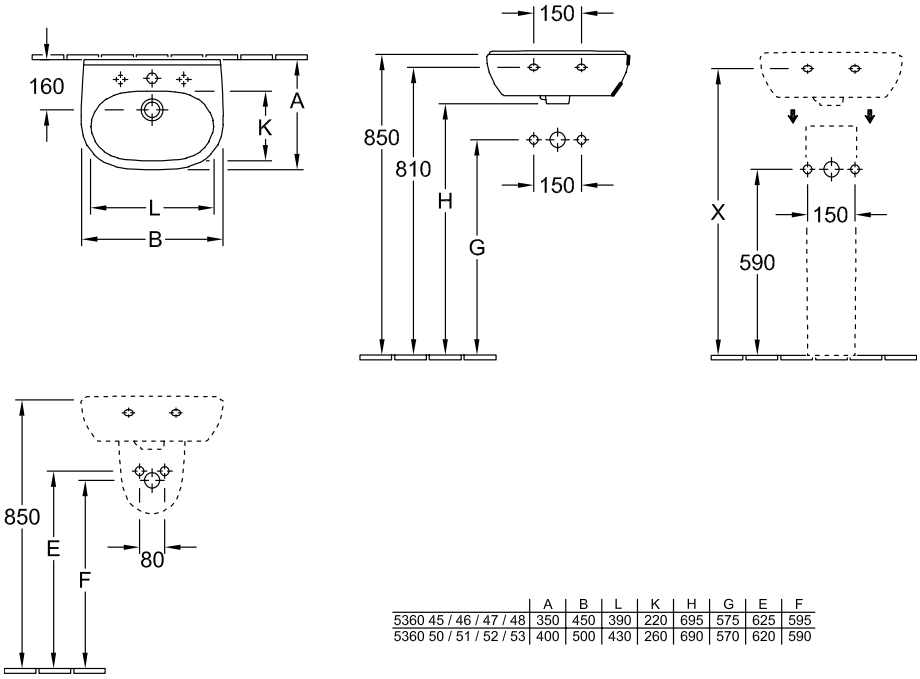

	A	B	L	K	H	G	E	F
5360 45 / 46 / 47 / 48	350	450	390	220	695	575	625	595
5360 50 / 51 / 52 / 53	400	500	430	260	690	570	620	590