O.NOVO TRAP COVER

PRODUCT INFORMATION

Article title	Villeroy & Boch O.novo Trap cover, 210 x 230 x 270 mm, White Alpin
Article number	52670001
Scope of delivery	1 x trap cover , 1 x fastening set
Depth in mm	230
Width in mm	210
Height in mm	270
Collection	O.novo
Material	Sanitary ceramics
Colour name	White Alpin
Colour designation	White Alpin

TECHNICAL DRAWINGS

52670001

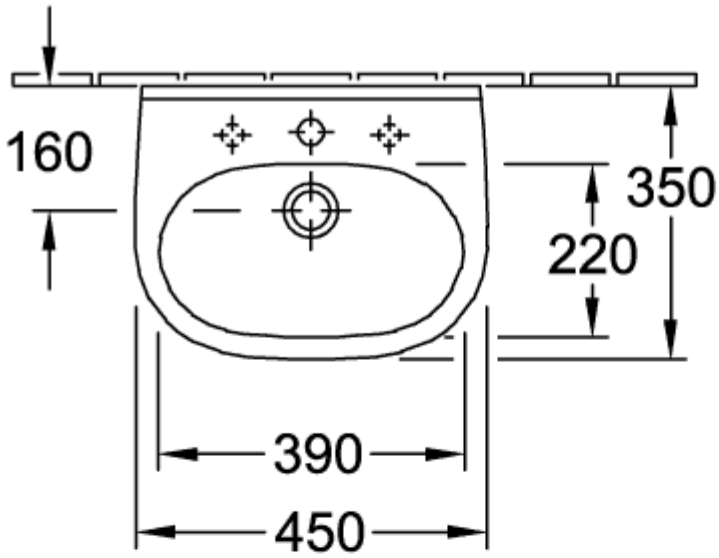

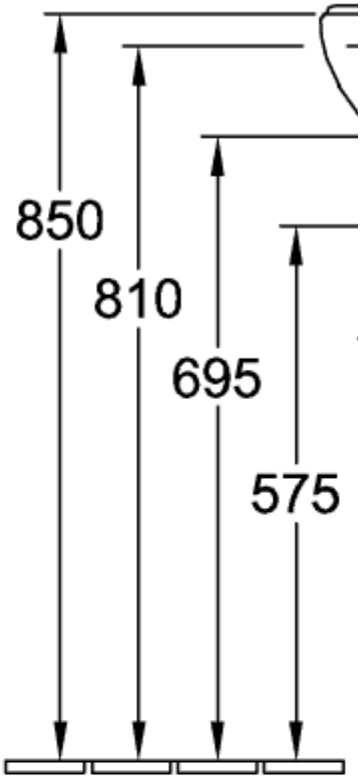

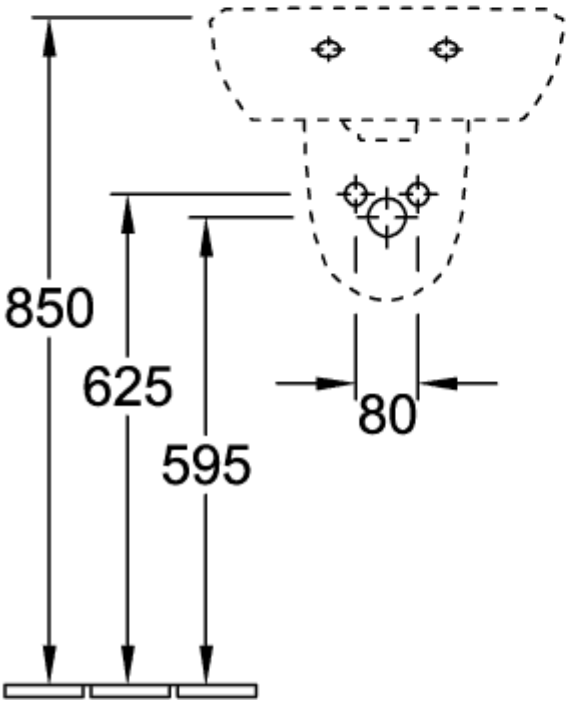

52670001

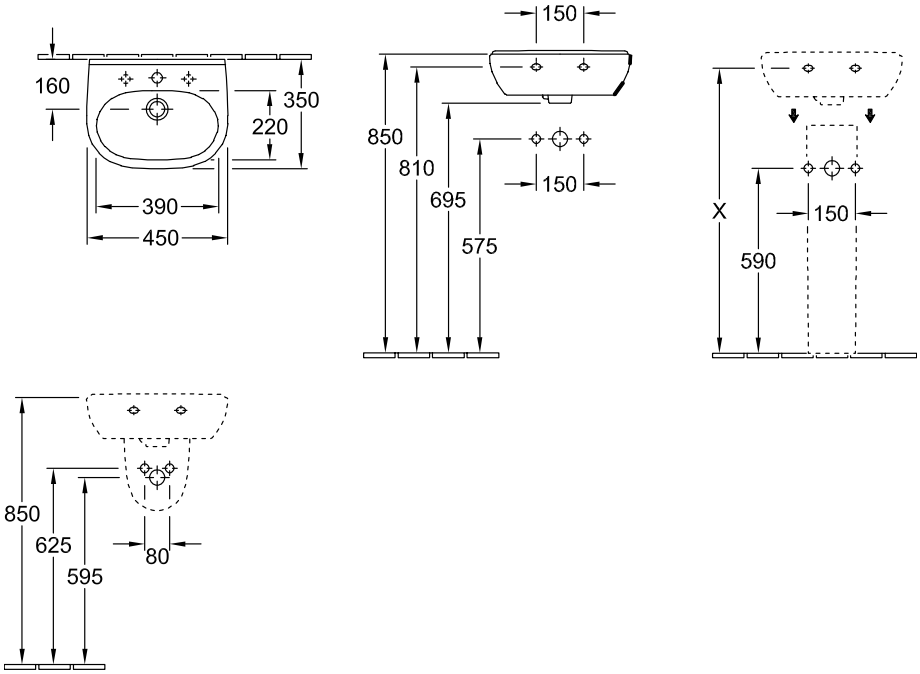
160
350
220
390
450
150
850
810
695
575
150
X
150
590
850
625
595
80

52670001

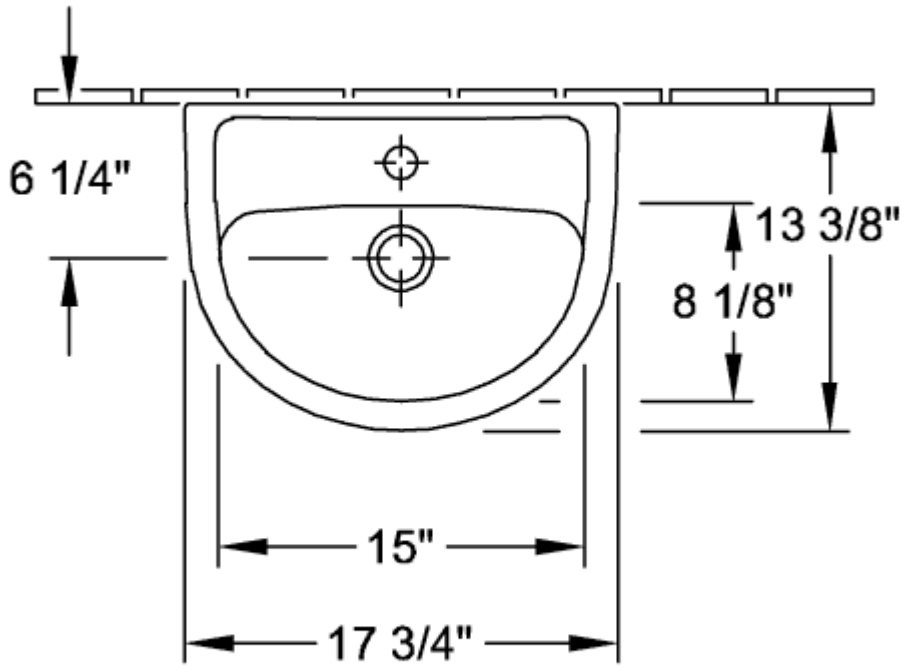

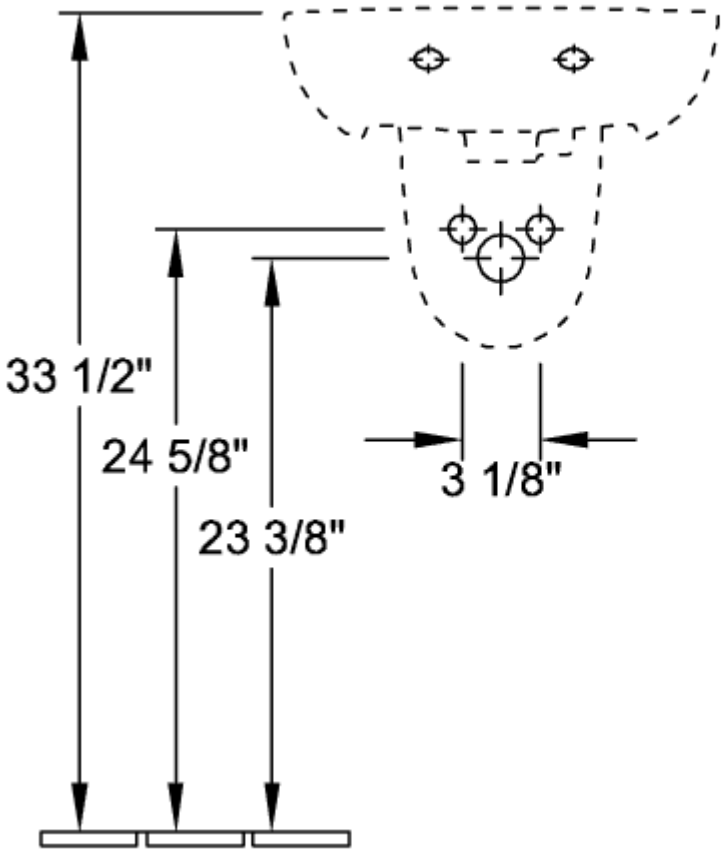

5267 00

52670001

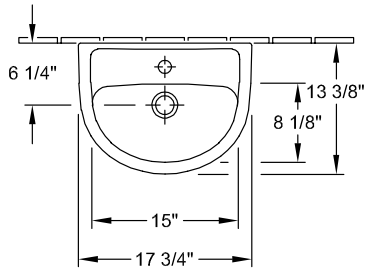

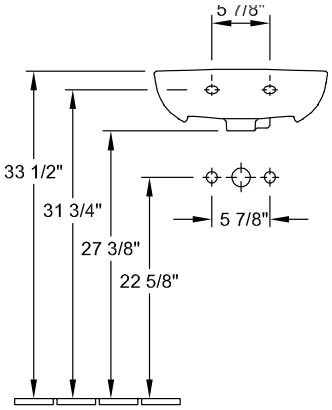

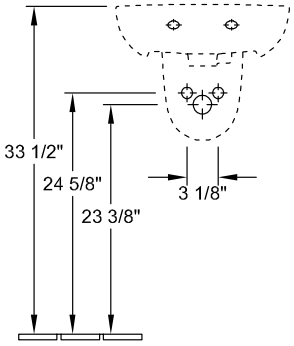

5267 00

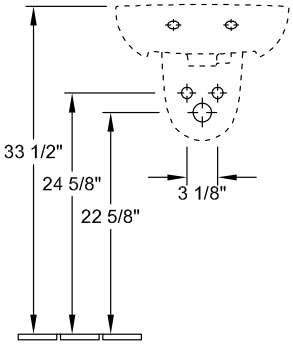

5267 00 + 9219 88 Easy Access

52670001

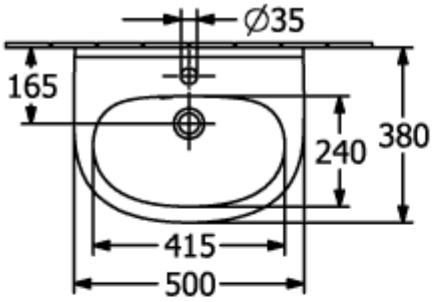

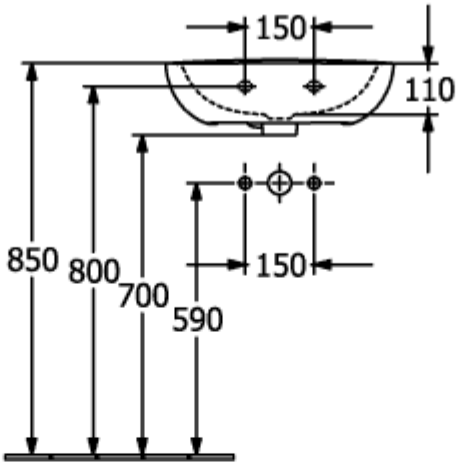

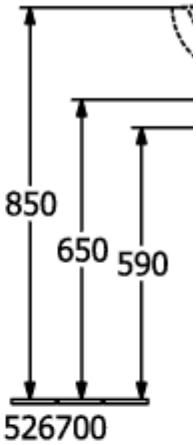

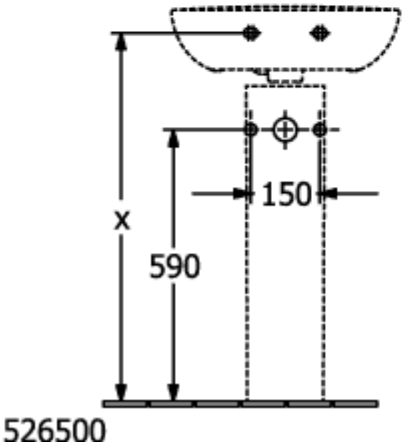

52670001

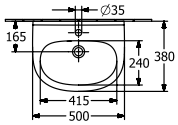

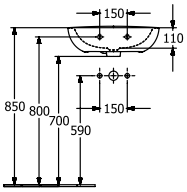

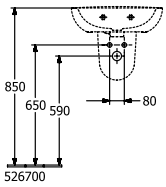

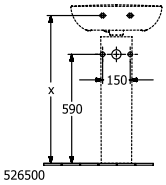

52670001

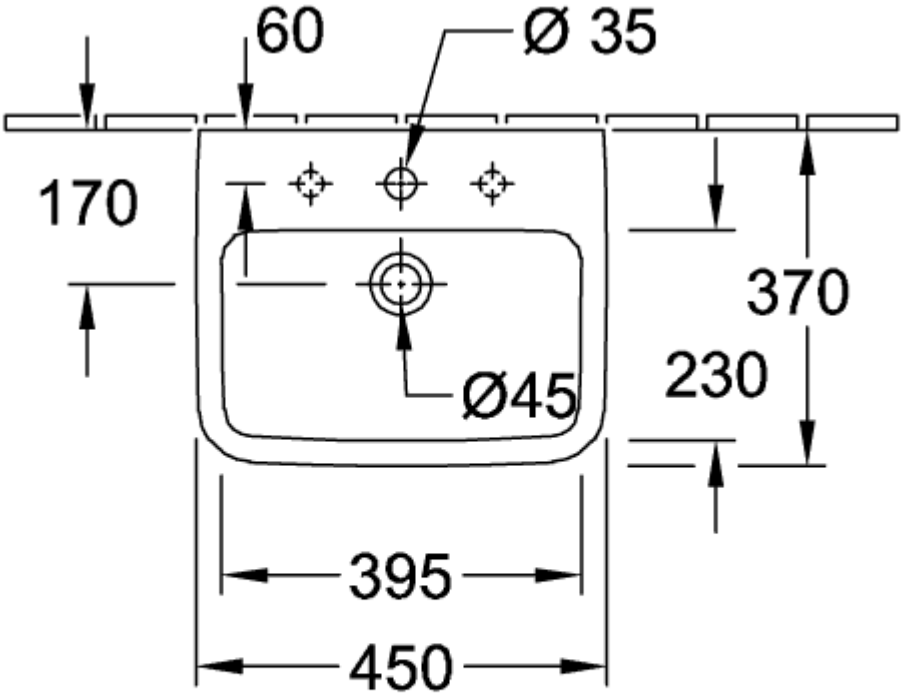
60
Ø 35
170
370
230
Ø45
395
450

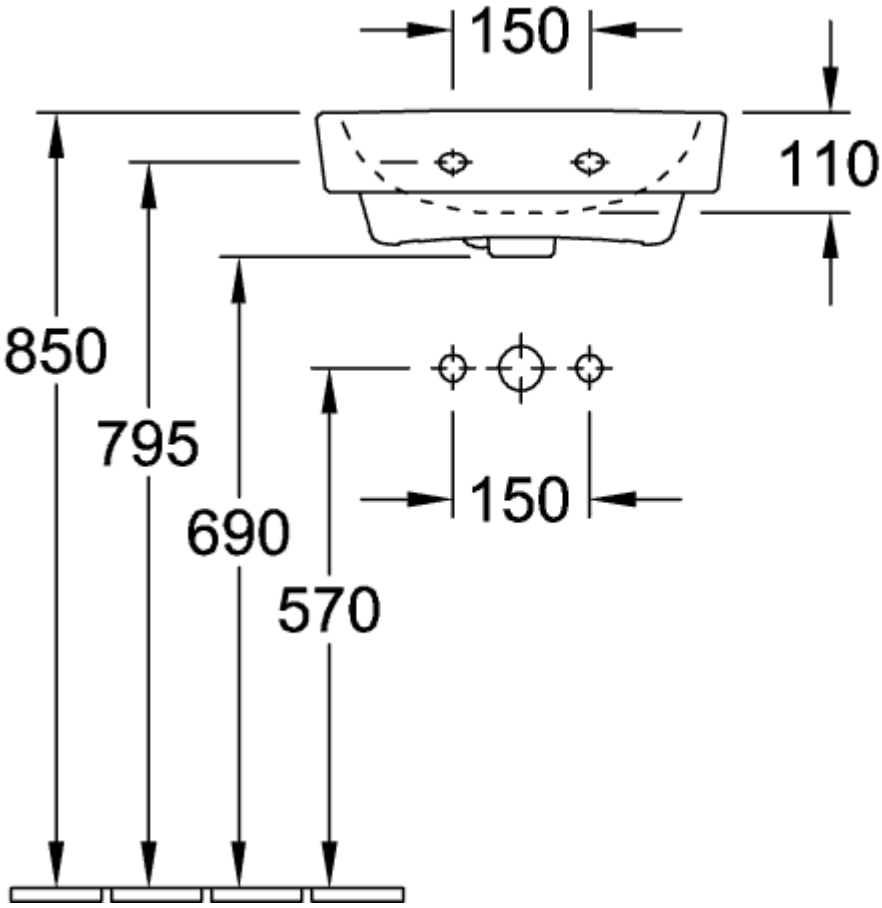
150
110
850
795
690
570
150

52670001

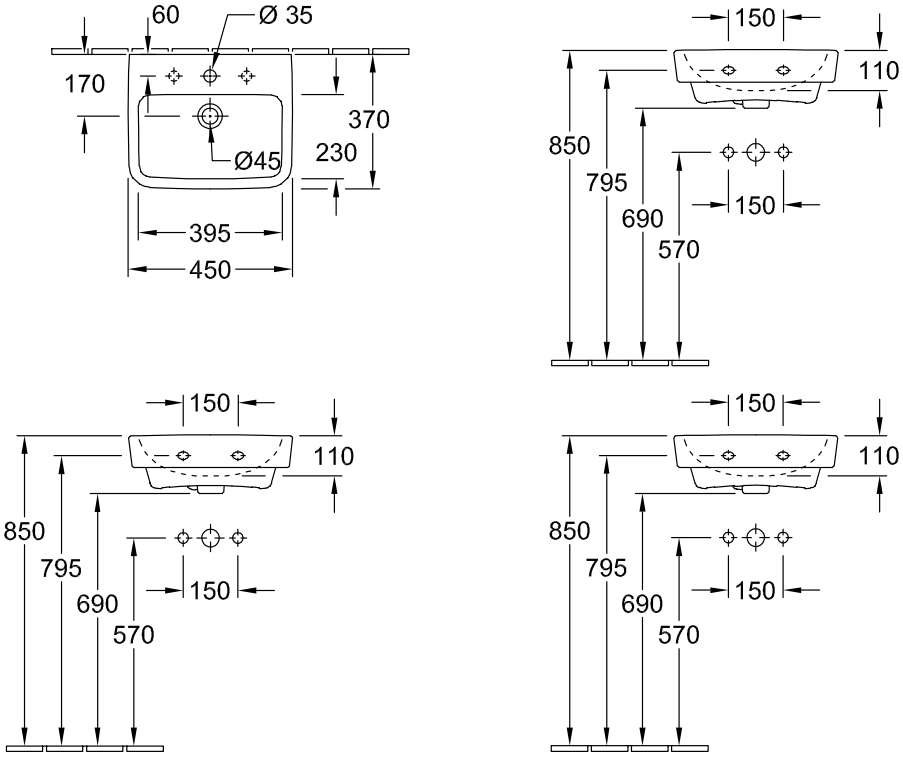
60
Ø 35
170
370
230
Ø45
395
450
150
110
850
795
690
570
150
150
110
850
795
690
570
150
150
110
850
795
690
570
150

52670001

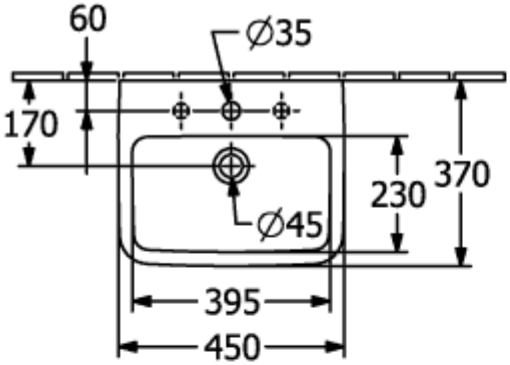

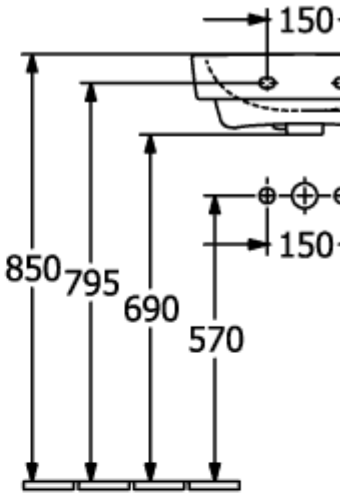

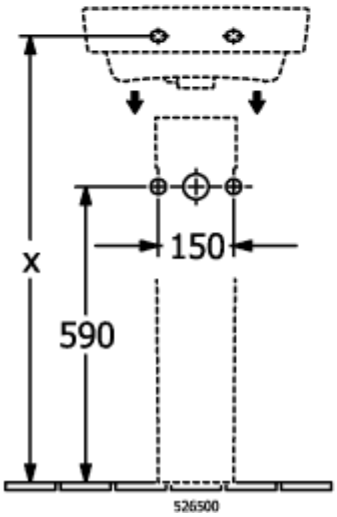

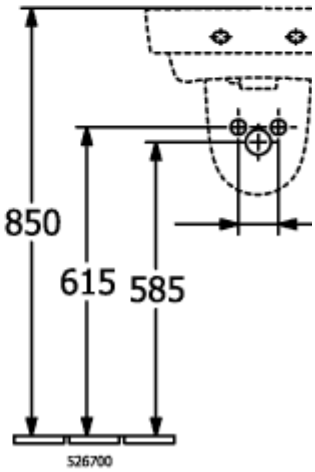

52670001

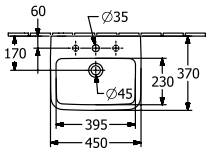

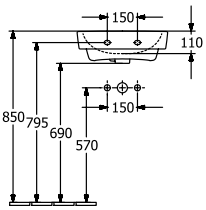

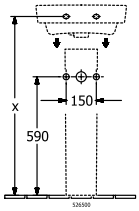

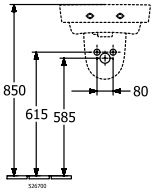

52670001

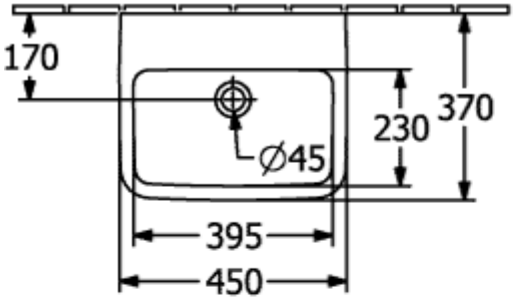

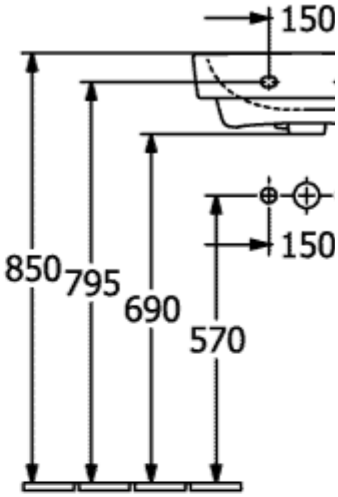

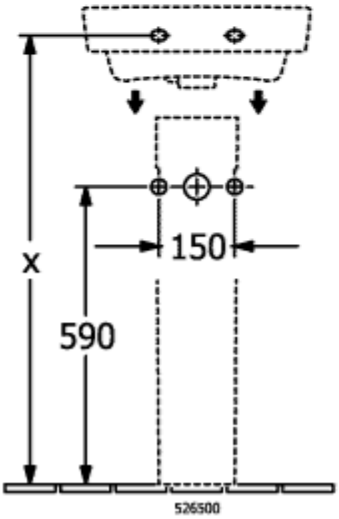

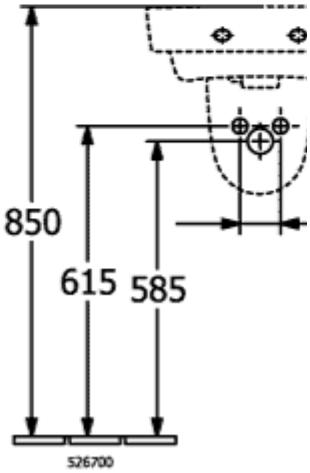

52670001

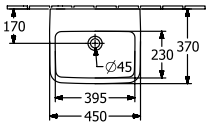

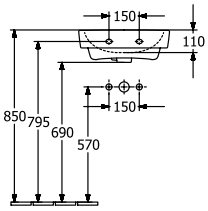

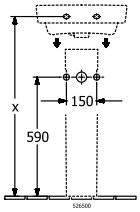

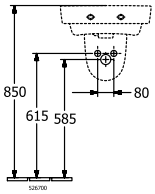

52670001

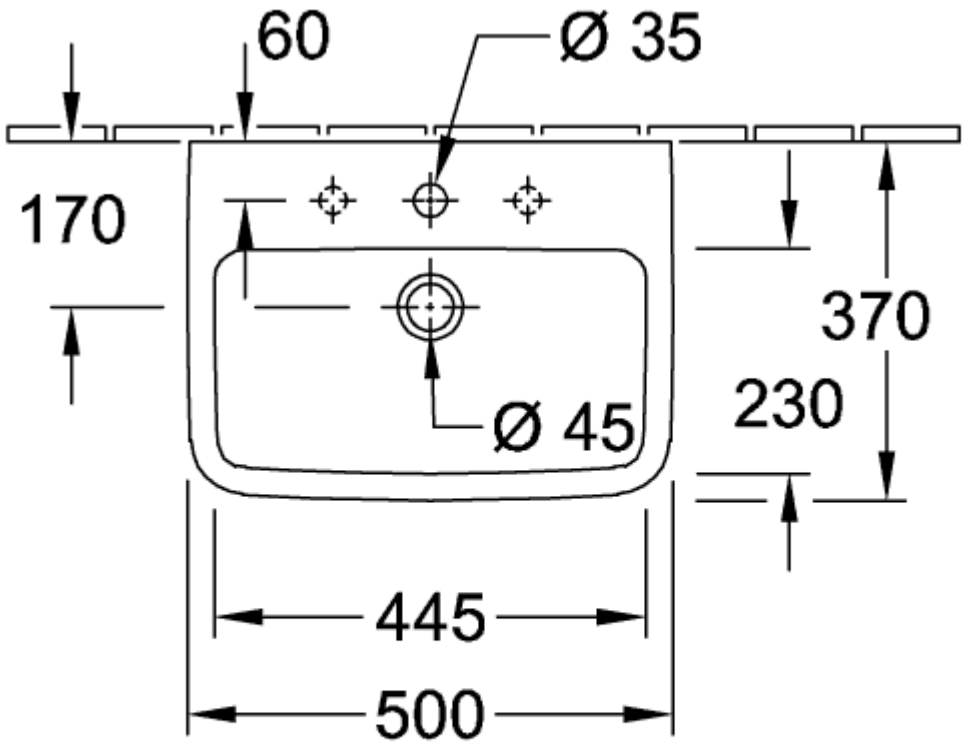
60
Ø 35
170
370
230
Ø 45
445
500

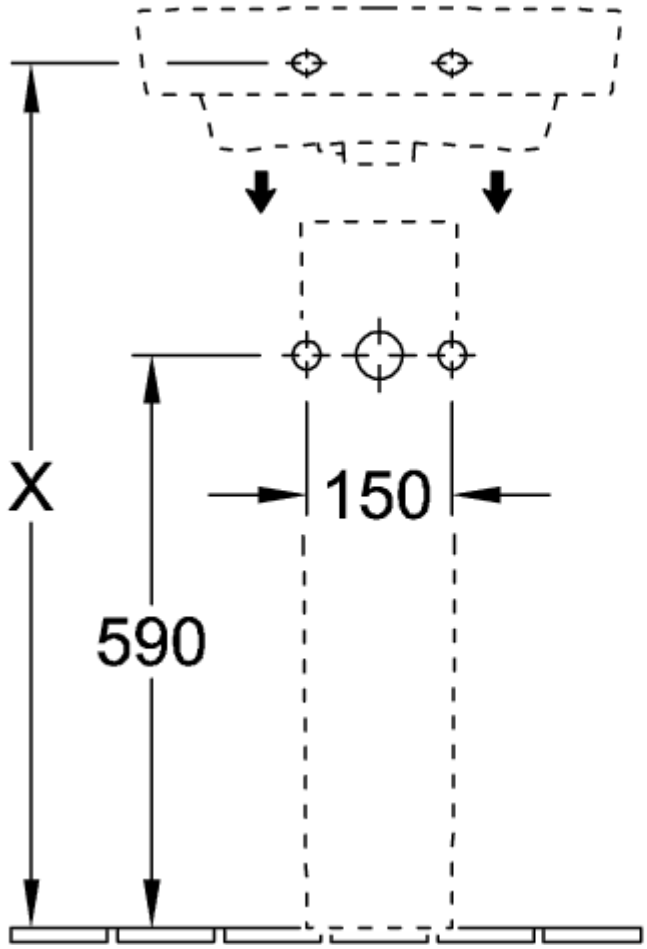
X
150
590

52670001

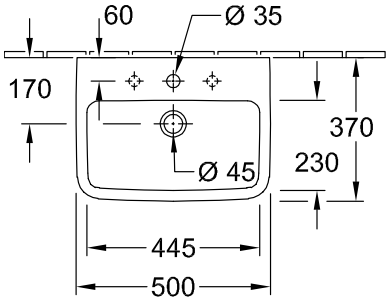
60
Ø 35
170
370
230
Ø 45
445
500

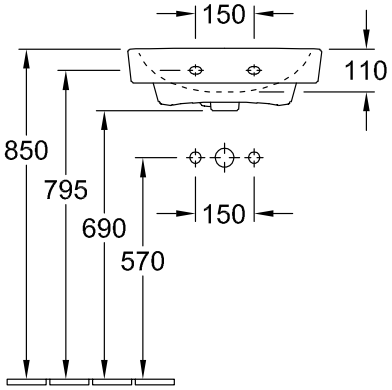
150
110
850
795
690
570
150

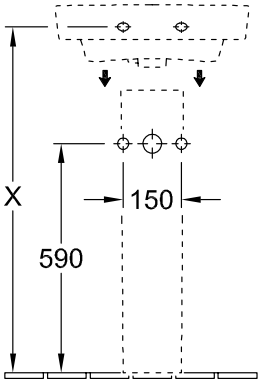
X
150
590

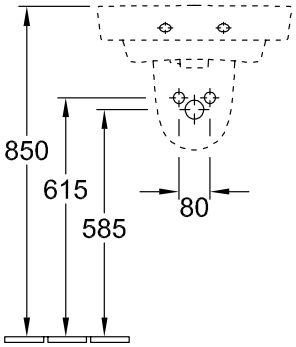
850
615
585
80

52670001

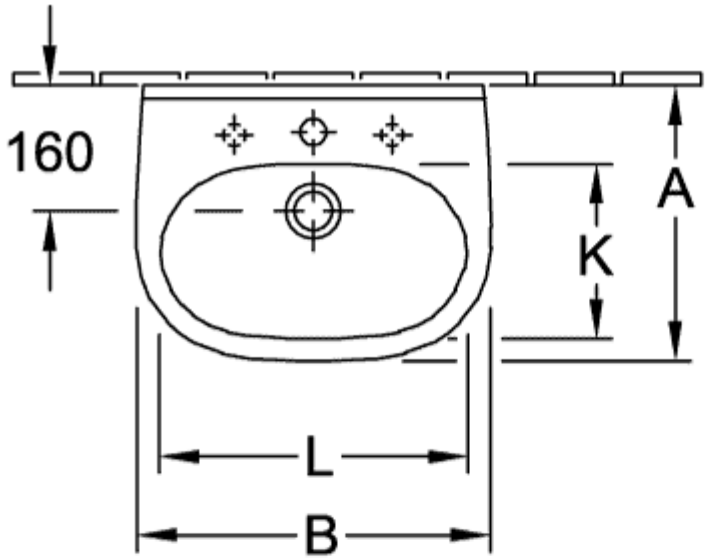

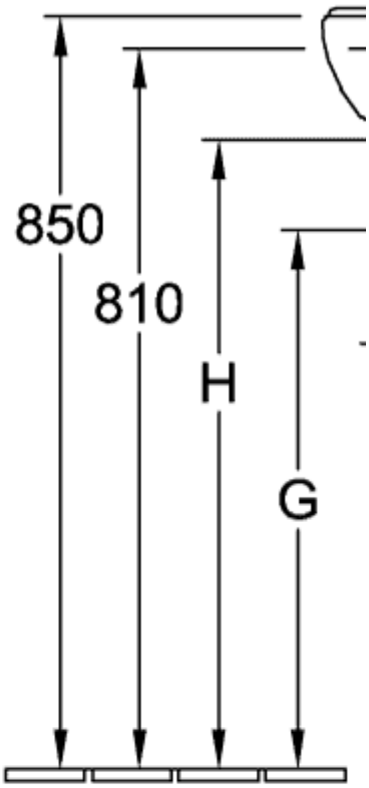

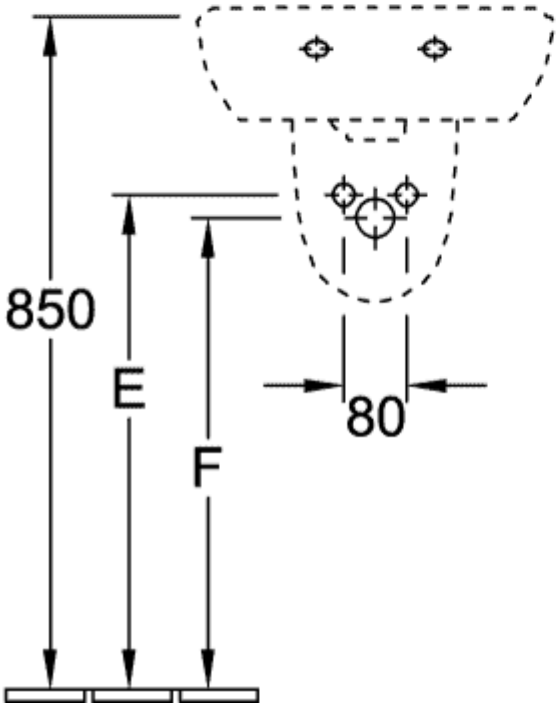

5360 45 / 46 / 47 /
5360 50 / 51 / 52 /

52670001

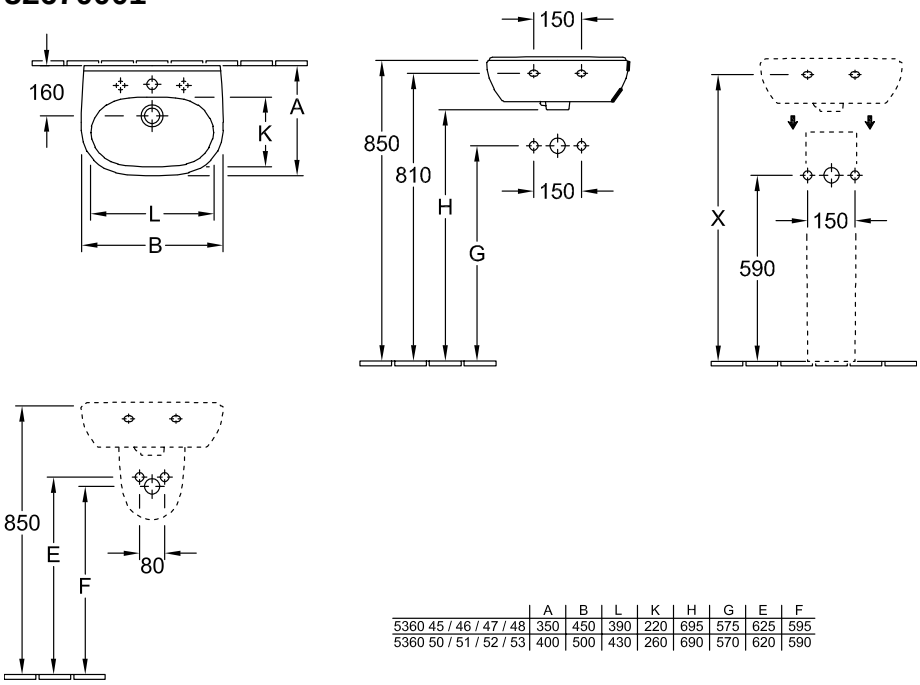

	A	B	L	K	H	G	E	F
5360 45 / 46 / 47 / 48	350	450	390	220	695	575	625	595
5360 50 / 51 / 52 / 53	400	500	430	260	690	570	620	590

52670001

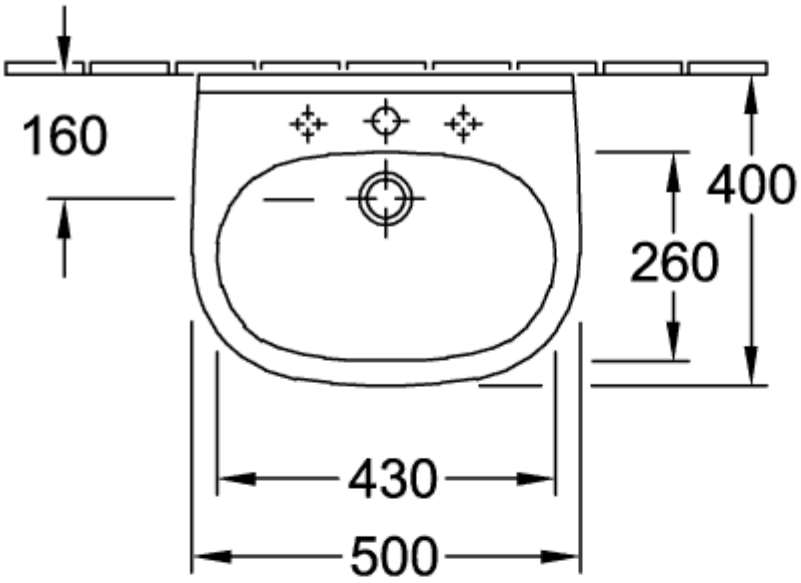

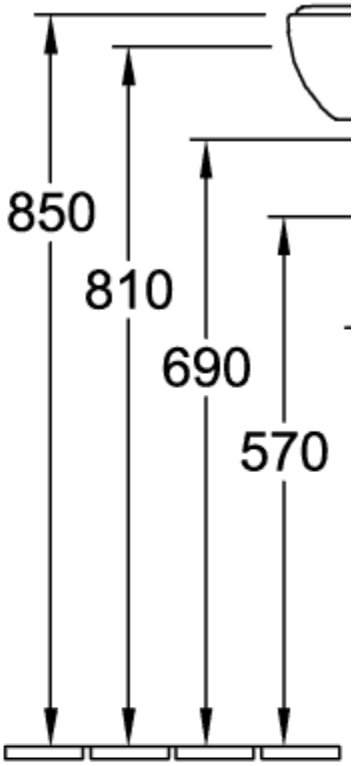

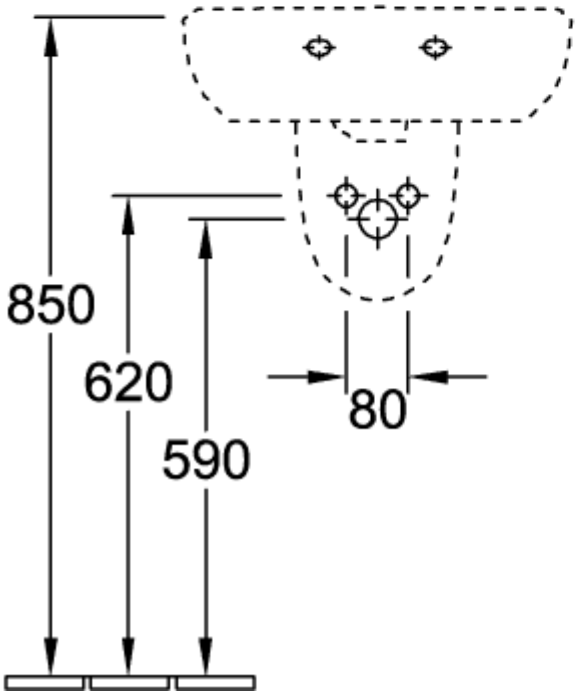

52670001

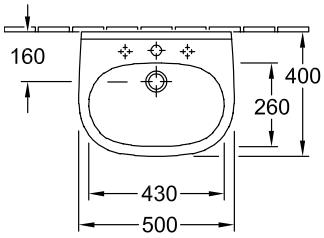
160
400
260
430
500

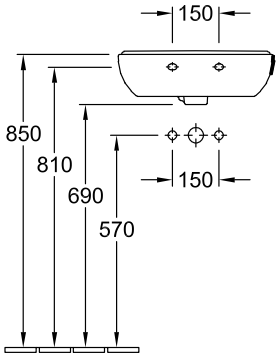
150
850
810
690
570
150

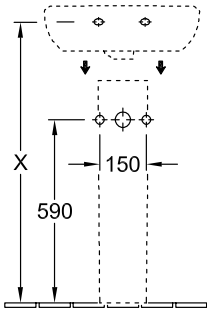
X
150
590

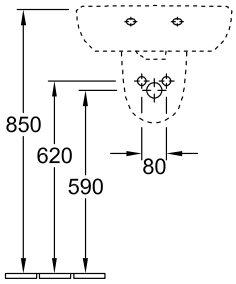
850
620
590
80

52670001

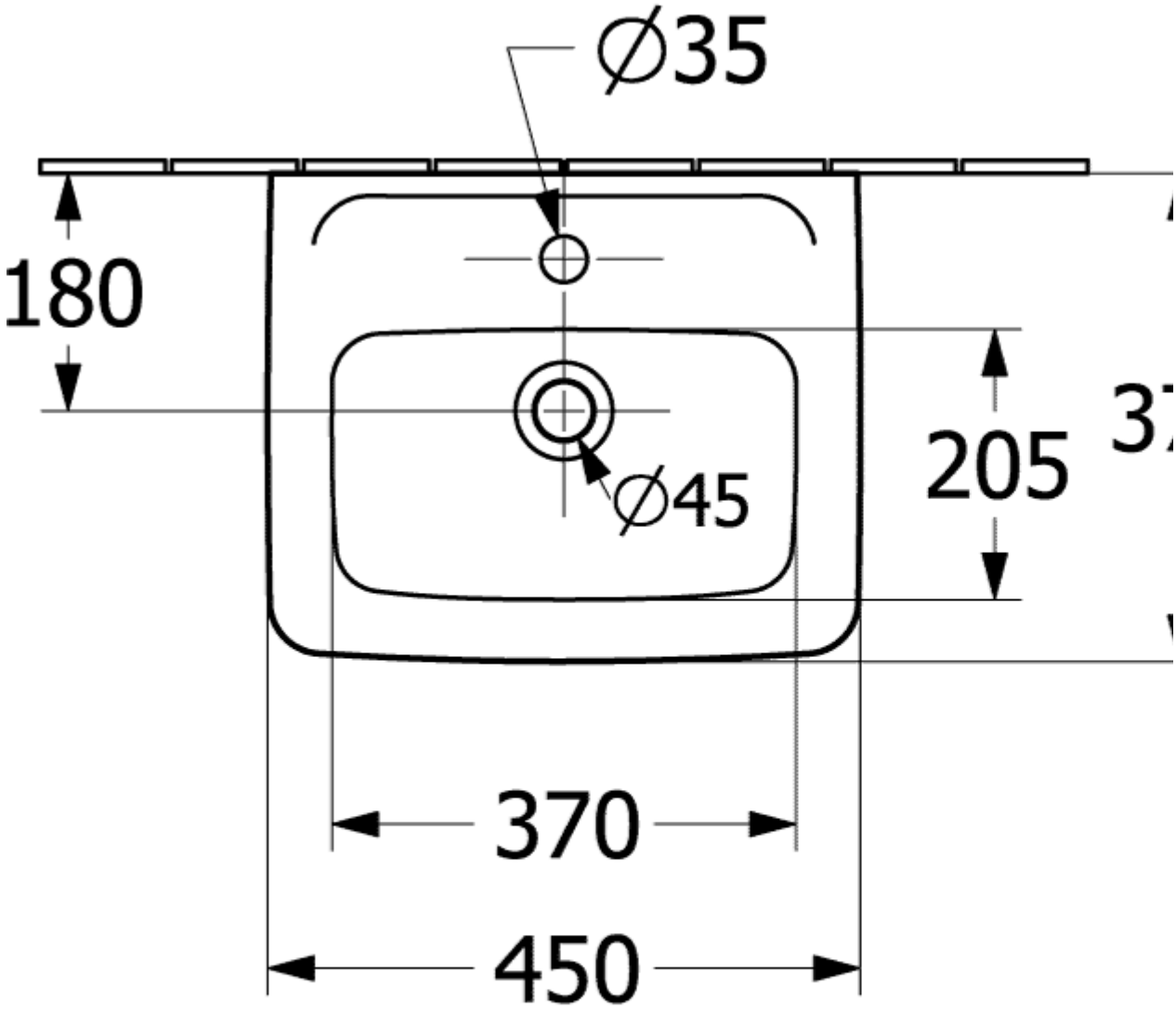

52670001

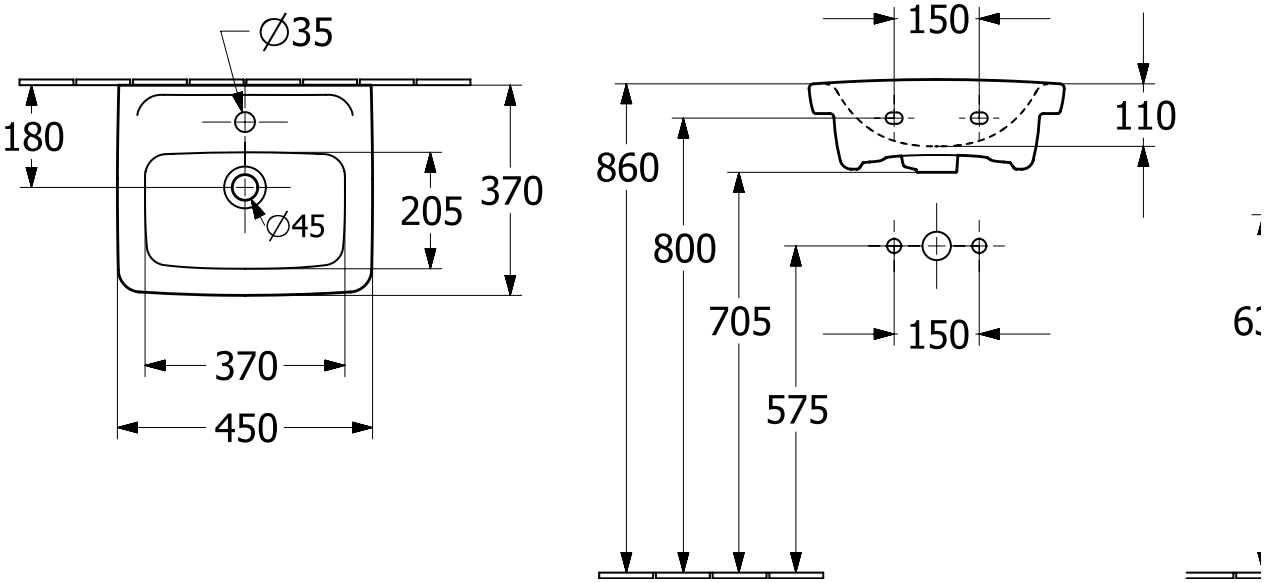

52670001

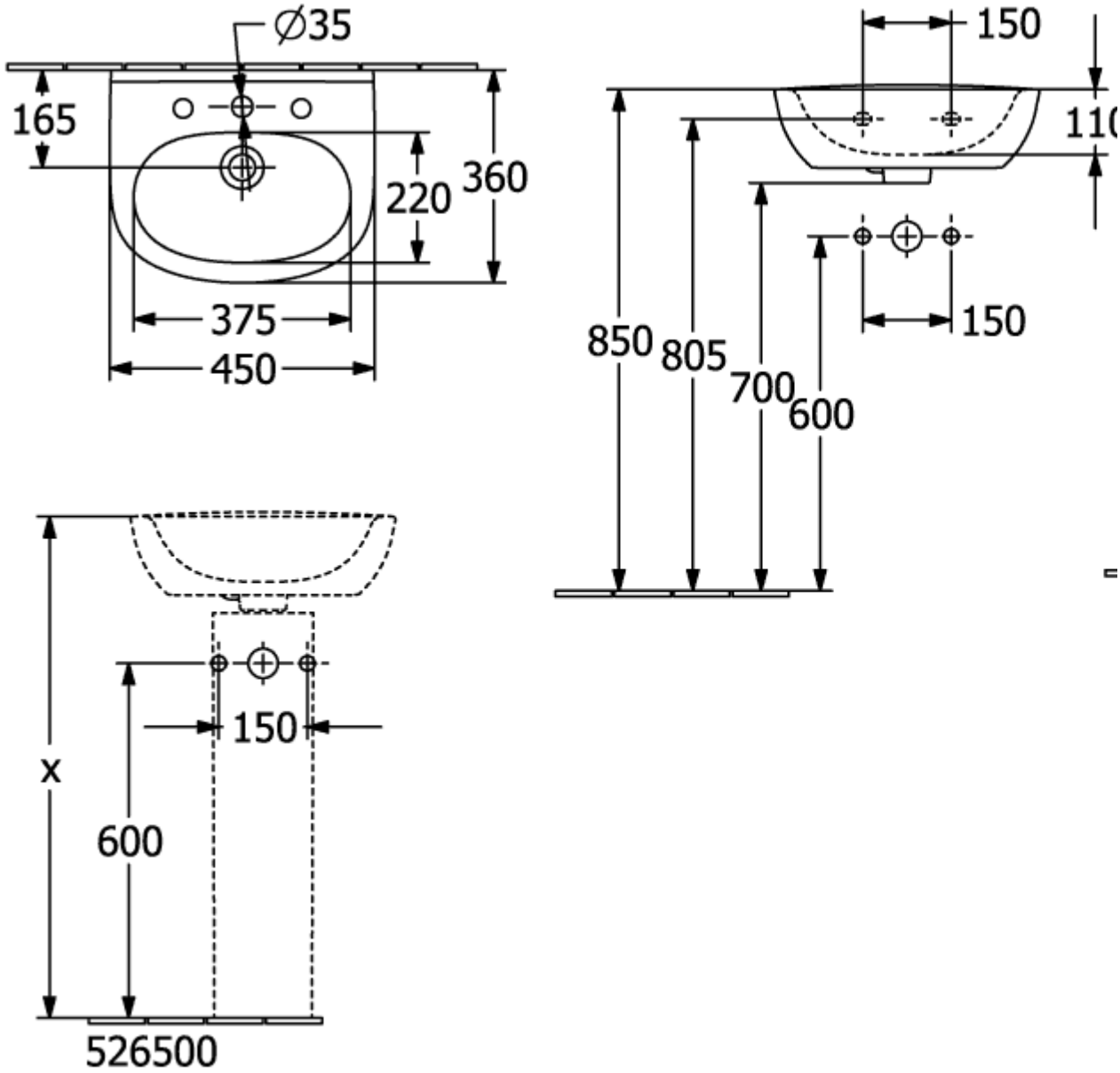
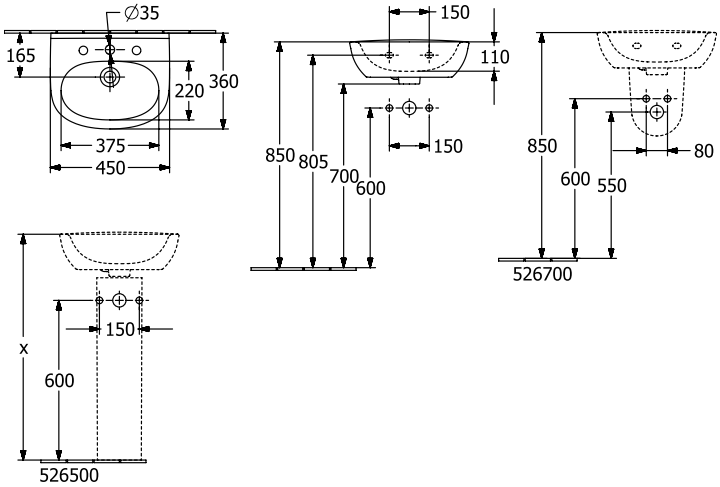
52670001