LOOP & FRIENDS SURFACE-MOUNTED WASHBASIN OVAL

PRODUCT INFORMATION

Article title	Villeroy & Boch Loop & Friends Surface-mounted washbasin, 630 x 430 x 120 mm, White Alpin, with overflow
Article number	51511001
Assembly / Assembly type	Surface-mounted
Scope of delivery	1 x surface-mounted washbasin , 1 x extended ball rod to operate pop-up outlet valve 1 x outlet valve with ceramic valve cover 1 x fastening set 1 x cut-out template
Depth in mm	430
Width in mm	630
Height in mm	120
Interior depth	100
Collection	Loop & Friends
Suitable for	Wall-mounted tap fittings, Matching Villeroy&Boch furniture|Tap fitting with raised base
Material	Sanitary ceramics
surface	glossy
Colour name	White Alpin
With overflow	Yes
Shape	Oval
Colour designation	White Alpin
Antibacterial surface (with AntiBac)	No
Easy surface cleaning (CeramicPlus)	No
Underside of washbasin	unground
Number of bowls	1

TECHNICAL DRAWINGS

51511001

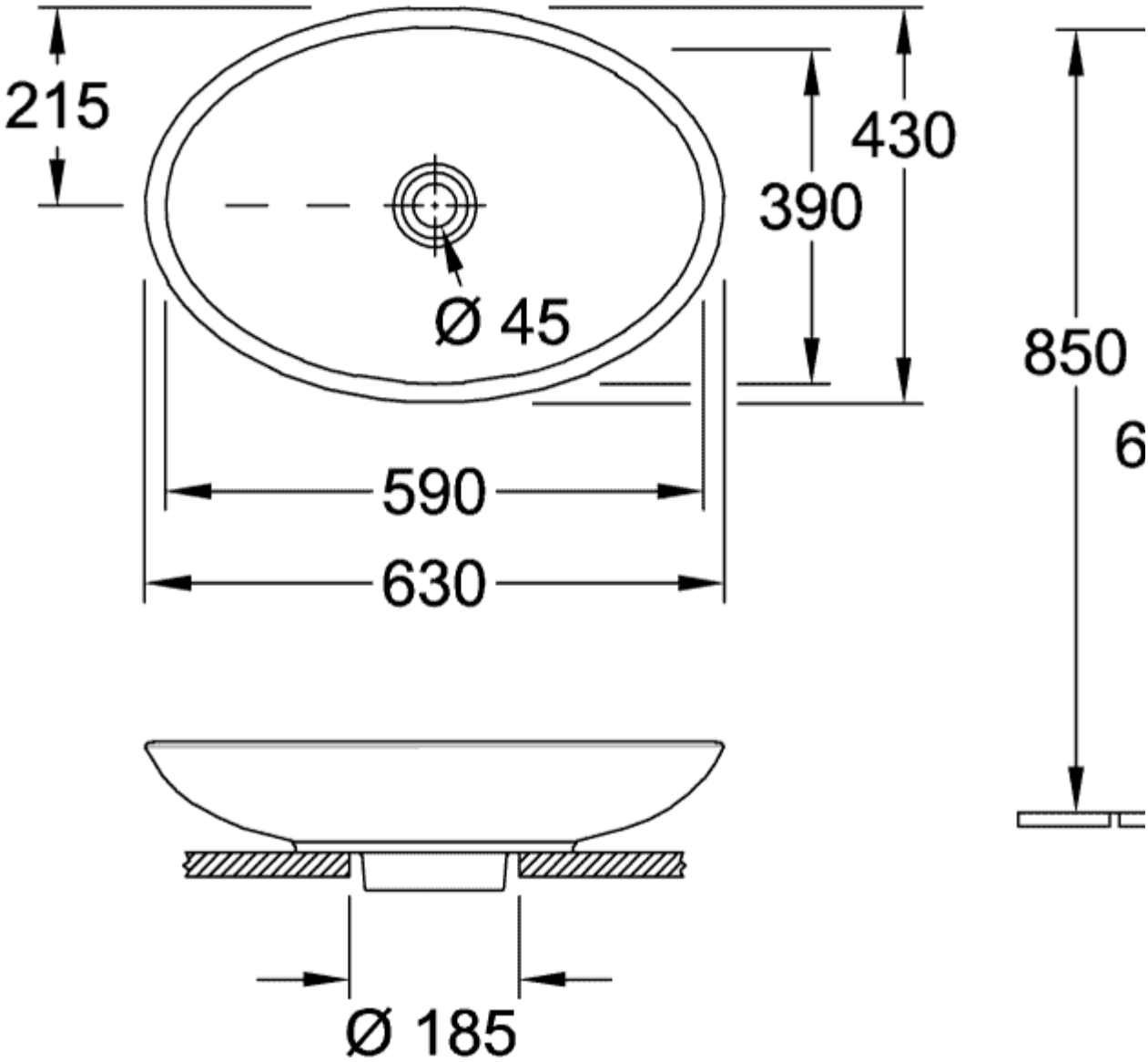
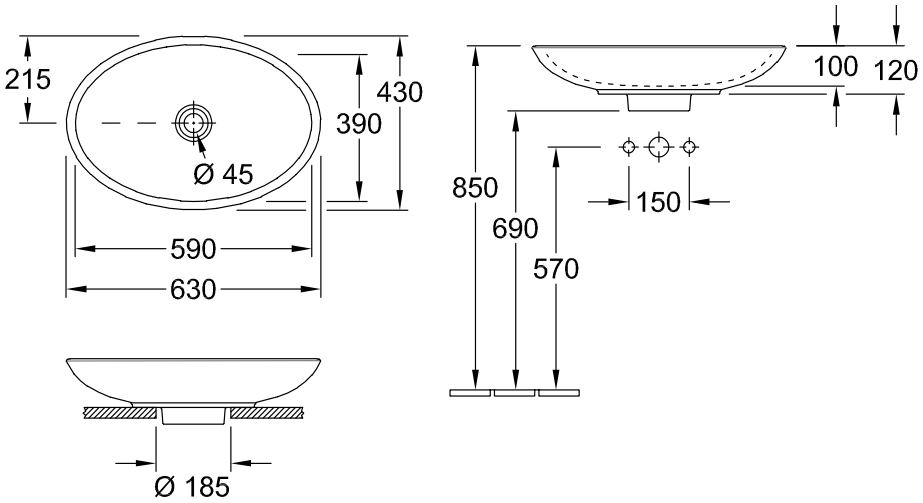
51511001