SUBWAY 2.0 WASHDOWN TOILET COMFORT, RIMLESS OVAL

PRODUCT INFORMATION

Article title	Villeroy & Boch Subway 2.0 Washdown toilet Comfort, rimless, wall-mounted, White Alpin
Article number	4609R001
Assembly / Assembly type	wall-mounted
Assembly instructions	not suitable for installation with flush valves
Scope of delivery	1 x washdown toilet, rimless , 1 x fastening set
Depth in mm	580
Width in mm	410
Height in mm	350
Collection	Subway 2.0
Suitable for	Concealed cistern
Innovative flushing technology (with TwistFlush)	No
Flush volume l	3 / 4,5 l
Wall-mounted - floor-standing	wall-mounted
Material	Sanitary ceramics
surface	glossy
Colour name	White Alpin
Shape	Oval
Colour designation	White Alpin
Antibacterial surface (with AntiBac)	No
Easy surface cleaning (CeramicPlus)	No
Rimless (mit DirectFlush)	Yes
Flush type	Washdown toilet
Integrated freshness solution (with ViFresh)	No
Outlet / outlet	horizontal outlet

TECHNICAL DRAWINGS

4609R001

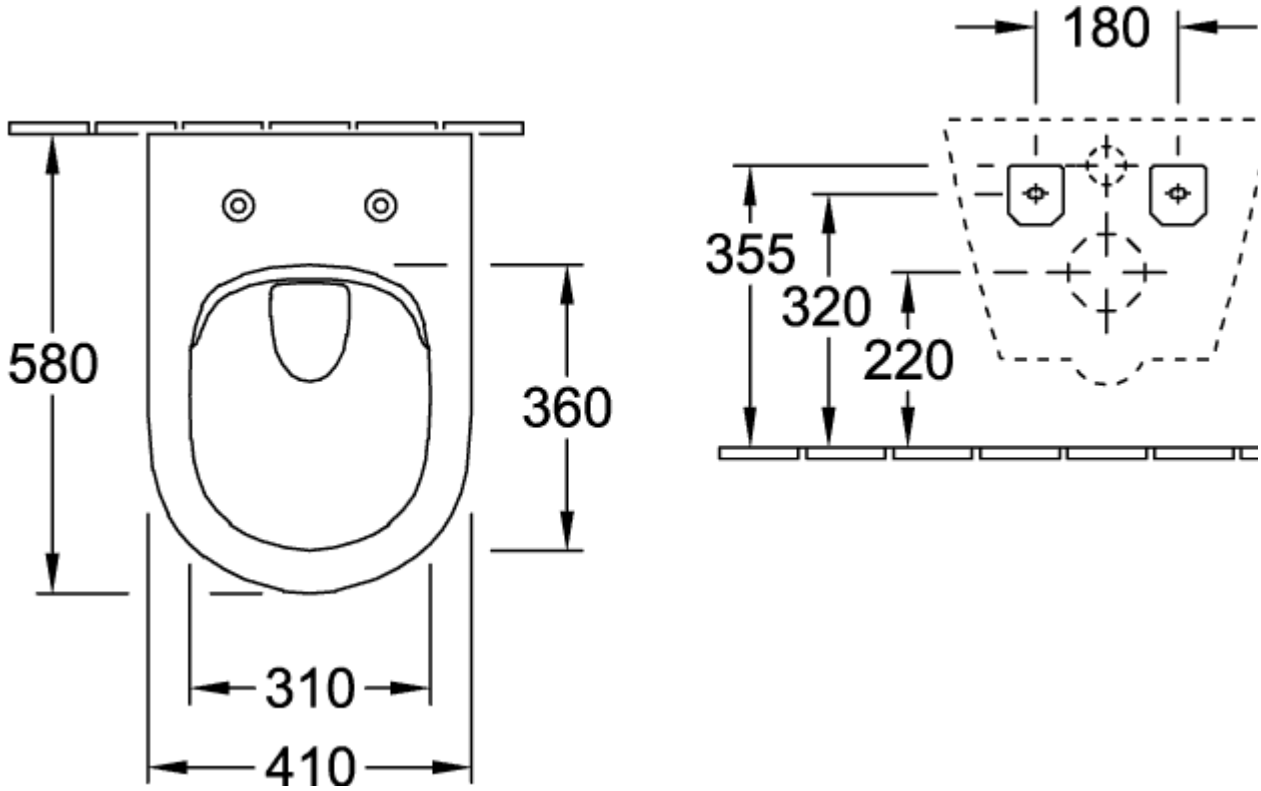
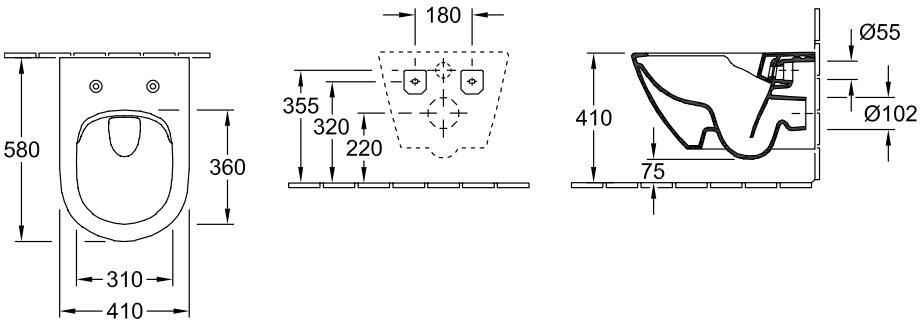
4609R001