MEMENTO 2.0 BIDET RECTANGLE

PRODUCT INFORMATION

Article title	Villeroy & Boch Memento 2.0 Bidet, wall-mounted, 375 x 560 mm, White Alpin
Article number	44330001
Assembly / Assembly type	wall-mounted
Scope of delivery	1 x bidet , 1 x fastening set
Depth in mm	560
Width in mm	375
Height in mm	230
Collection	Memento 2.0
Suitable for	1-hole mixer
Wall-mounted - floor-standing	wall-mounted
Material	Sanitary ceramics
surface	glossy
Colour name	White Alpin
Shape	Rectangle
Colour designation	White Alpin
Antibacterial surface (with AntiBac)	No
Easy surface cleaning (CeramicPlus)	No

TECHNICAL DRAWINGS

44330001

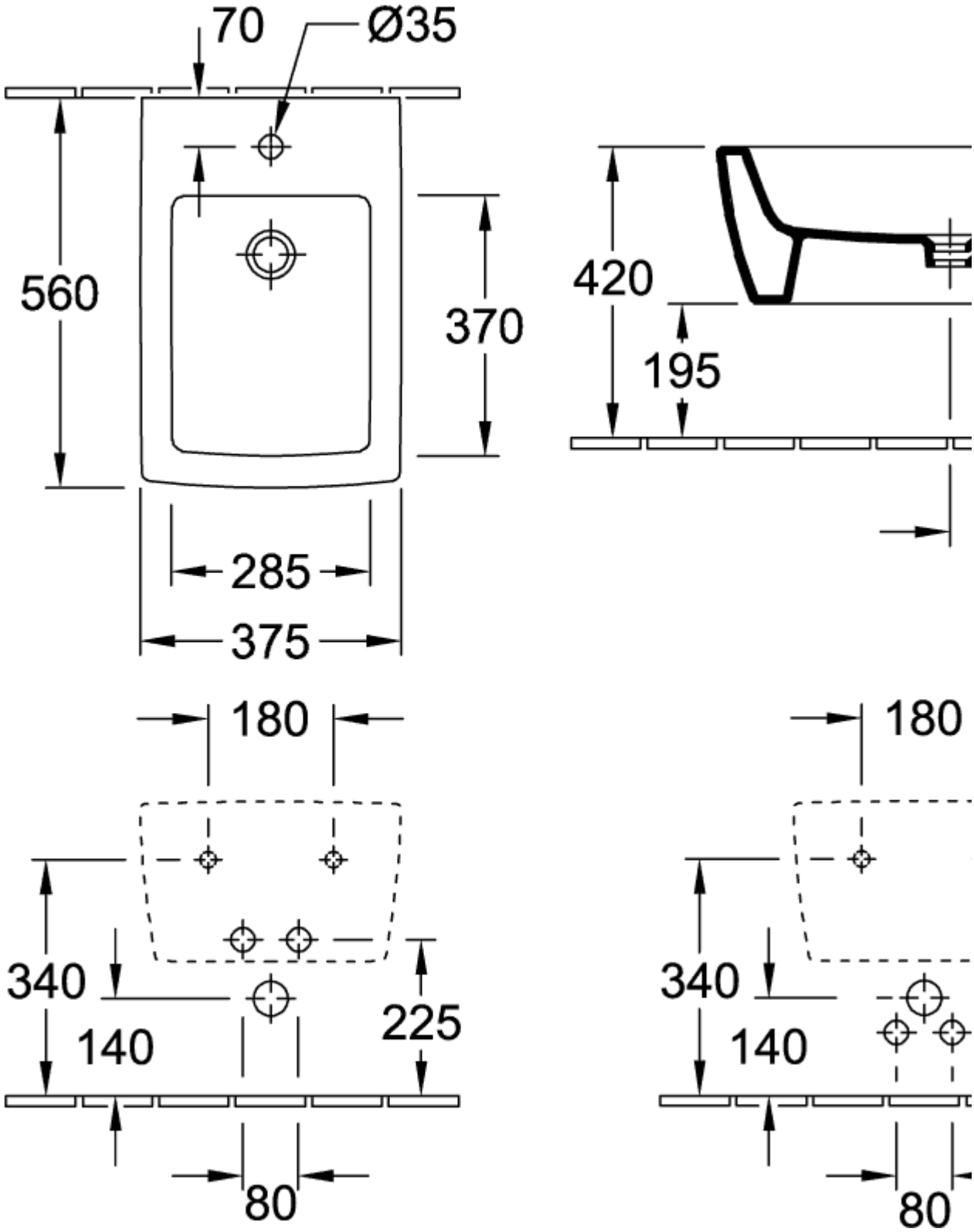

44330001

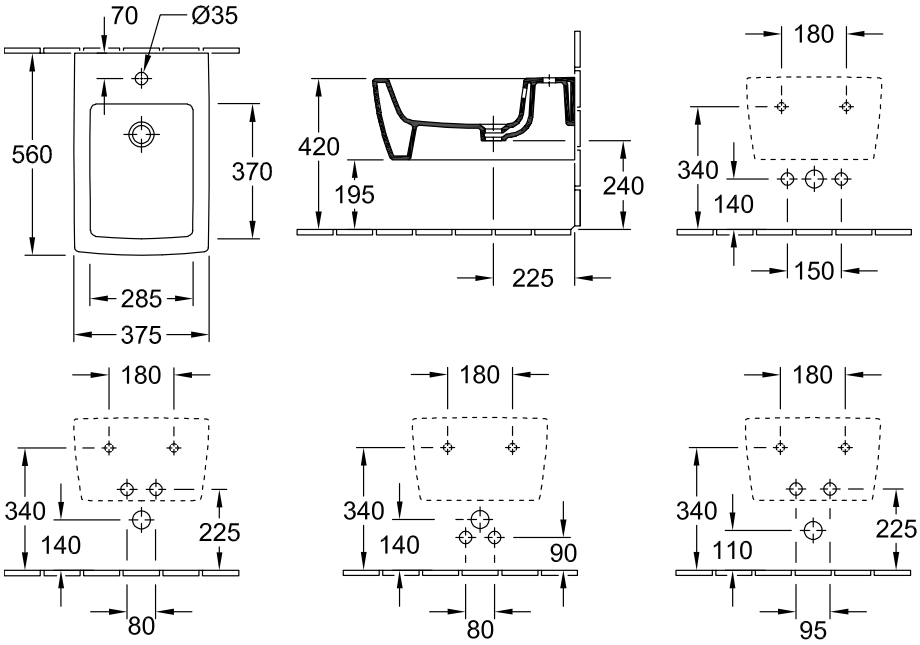
70
Ø35
560
370
285
375
420
195
240
225
180
340
140
150
180
340
140
225
80
180
340
140
90
80
180
340
110
225
95