MY NATURE SURFACE-MOUNTED WASHBASIN OVAL

PRODUCT INFORMATION

Article title	Villeroy & Boch My Nature Surface-mounted washbasin, 610 x 360 x 150 mm, White Alpin CeramicPlus, without overflow
Article number	411060R1
Assembly / Assembly type	Surface-mounted
Scope of delivery	1 x surface-mounted washbasin , 1 x non-closing outlet valve with ceramic valve cover 1 x fastening set
Depth in mm	360
Width in mm	610
Height in mm	150
Interior depth	105
Collection	My Nature
Tap fitting / Tap hole information	Please note: unclosable outlet valve must be used with models without overflow
Suitable for	Matching Villeroy&Boch furniture
Material	Sanitary ceramics
surface	glossy
Colour name	White Alpin CeramicPlus
With overflow	No
Shape	Oval
Colour designation	White Alpin
Antibacterial surface (with AntiBac)	No
Easy surface cleaning (CeramicPlus)	Yes
Underside of washbasin	unground
Number of bowls	1

TECHNICAL DRAWINGS

411060R1

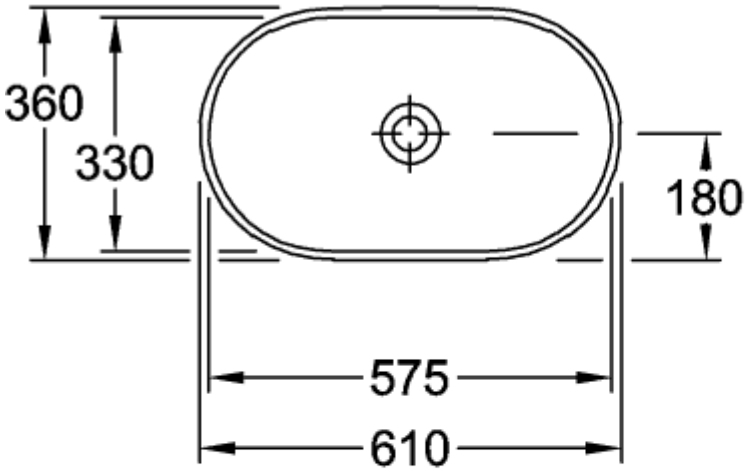

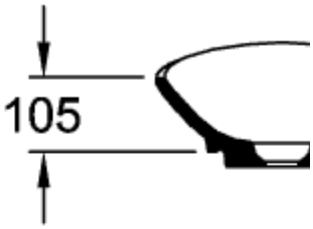

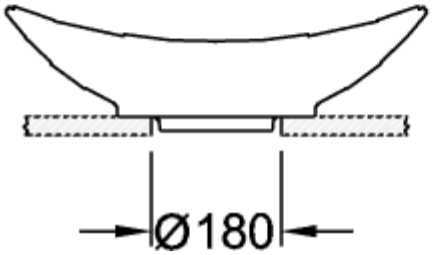

411060R1

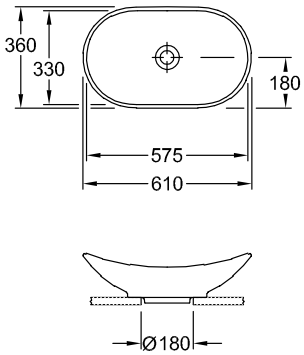

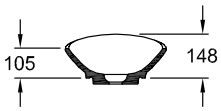

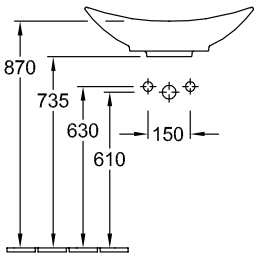

411060R1

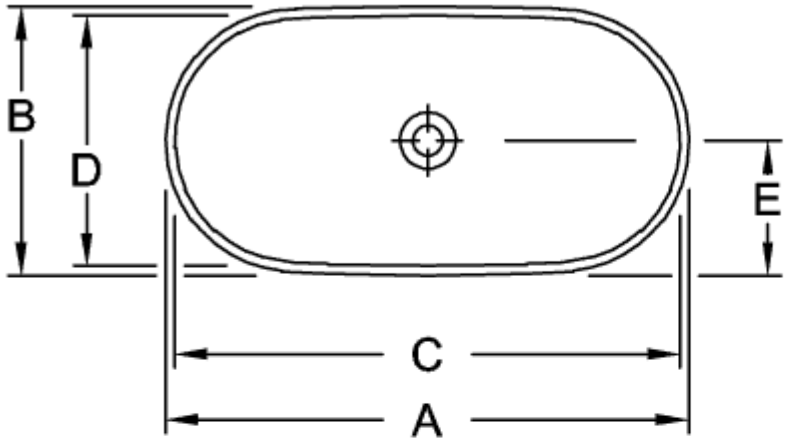

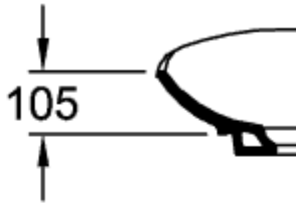

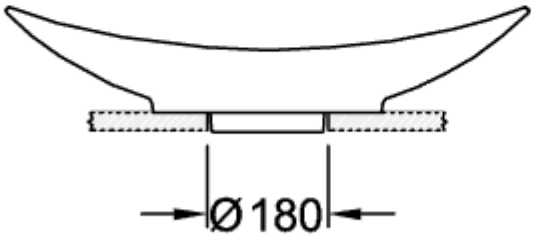

	A	B	C	D	E	F
4110 60	610	360	575	330	180	150
4110 80	810	410	785	380	205	160

411060R1

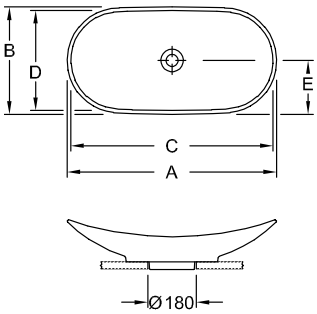

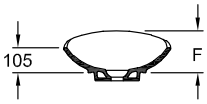

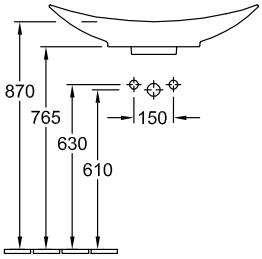

	A	B	C	D	E	F
4110 60	610	360	575	330	180	150
4110 80	810	410	785	380	205	160