ARCHITECTURA HANDWASHBASIN RECTANGLE

PRODUCT INFORMATION

Article title	Villeroy & Boch Architectura Handwashbasin, 450 x 380 x 145 mm, White Alpin, with overflow
Article number	43734501
Assembly / Assembly type	wall-mounted
Scope of delivery	1 x handwashbasin
Depth in mm	380
Width in mm	450
Height in mm	145
Interior depth	100
Collection	Architectura
Suitable for	1-hole mixer
Material	Sanitary ceramics
surface	glossy
Colour name	White Alpin
With overflow	Yes
Shape	Rectangle
Colour designation	White Alpin
Antibacterial surface (with AntiBac)	No
Easy surface cleaning (CeramicPlus)	No
Number of tap holes punched through	1
Number of bowls	1

TECHNICAL DRAWINGS

43734501

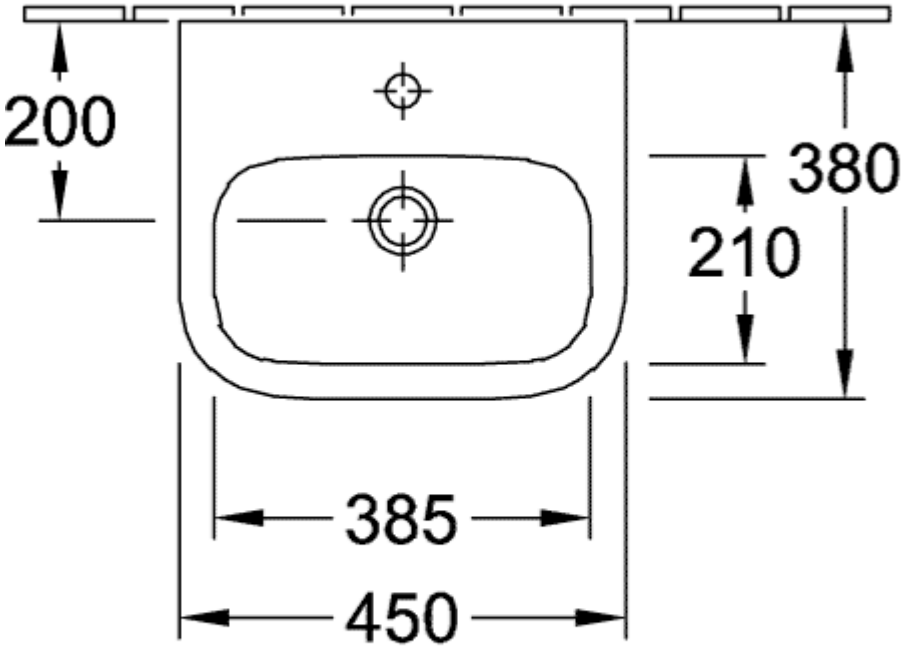
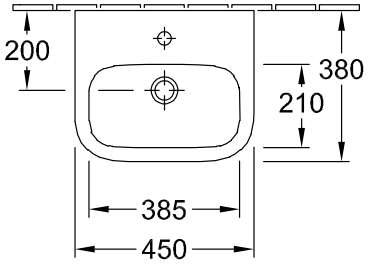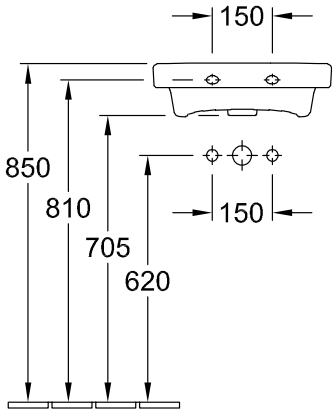
43734501