AVEO NEW GENERATION FREE-STANDING BATH FREE-STANDING

PRODUCT INFORMATION

Article title	Villeroy & Boch Aveo New Generation Free-standing bath, 1900 x 950 mm, White Alpin
Article number	UBQ194AVE9T1V-01
Assembly / Assembly type	freestanding
Scope of delivery	1 x free-standing bath , 1 x extended outlet and overflow (chrome-plated)
Length in mm	1900
Width in mm	950
Height in mm	830
Interior depth	443
Collection	Aveo New Generation
Material	Quaryl®
Colour name	White Alpin
Other material	Waste/overflow combination: Plastic Outlet cover: Plastic
Other surfaces	Waste/overflow combination: glossy, Outlet cover: glossy
With overflow	Yes
Number of people	1
Shape	Free-standing
Colour designation	White Alpin
Other colour designations	Waste/overflow combination: Chrome, Outlet cover: Chrome
With slip resistance	No
Outlet / outlet	outlet at the foot end
Interior form	oval
SilentFlow	No

TECHNICAL DRAWINGS

UBQ194AVE9T1V-01

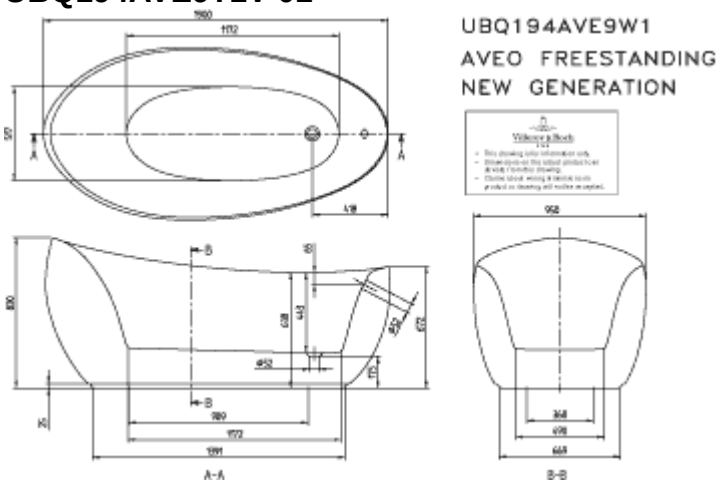
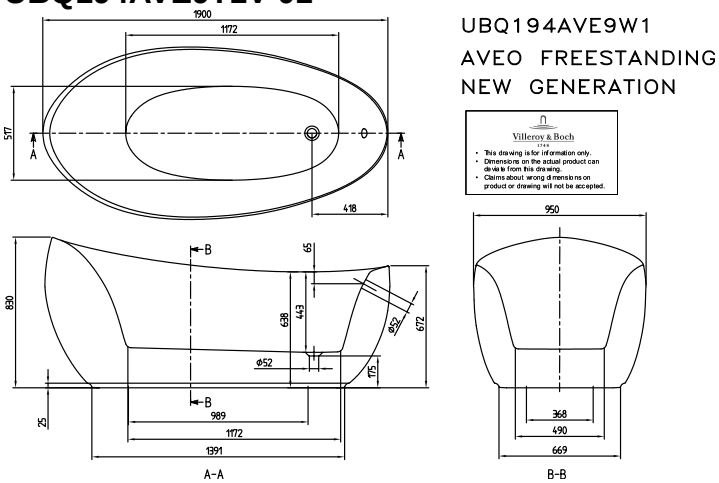
UBQ194AVE9T1V-01