LOOP & FRIENDS SPECIAL BATH SPECIAL SHAPE

PRODUCT INFORMATION

Article title	Villeroy & Boch Loop & Friends Special bath SQUARE, 1750 x 1350 mm, White Alpin
Article number	UBA175LFS9REV-01
Assembly / Assembly type	Corner installation
Scope of delivery	1 x special form bath
Length in mm	1750
Width in mm	1350
Height in mm	465
Interior depth	440
Collection	Loop & Friends
Material	Acrylic
Colour name	White Alpin
With overflow	Yes
Number of people	2
Shape	Special shape
Colour designation	White Alpin
With slip resistance	No
Outlet / outlet	central outlet
Interior form	trapezoid
SilentFlow	No

TECHNICAL DRAWINGS

UBA175LFS9REV-01

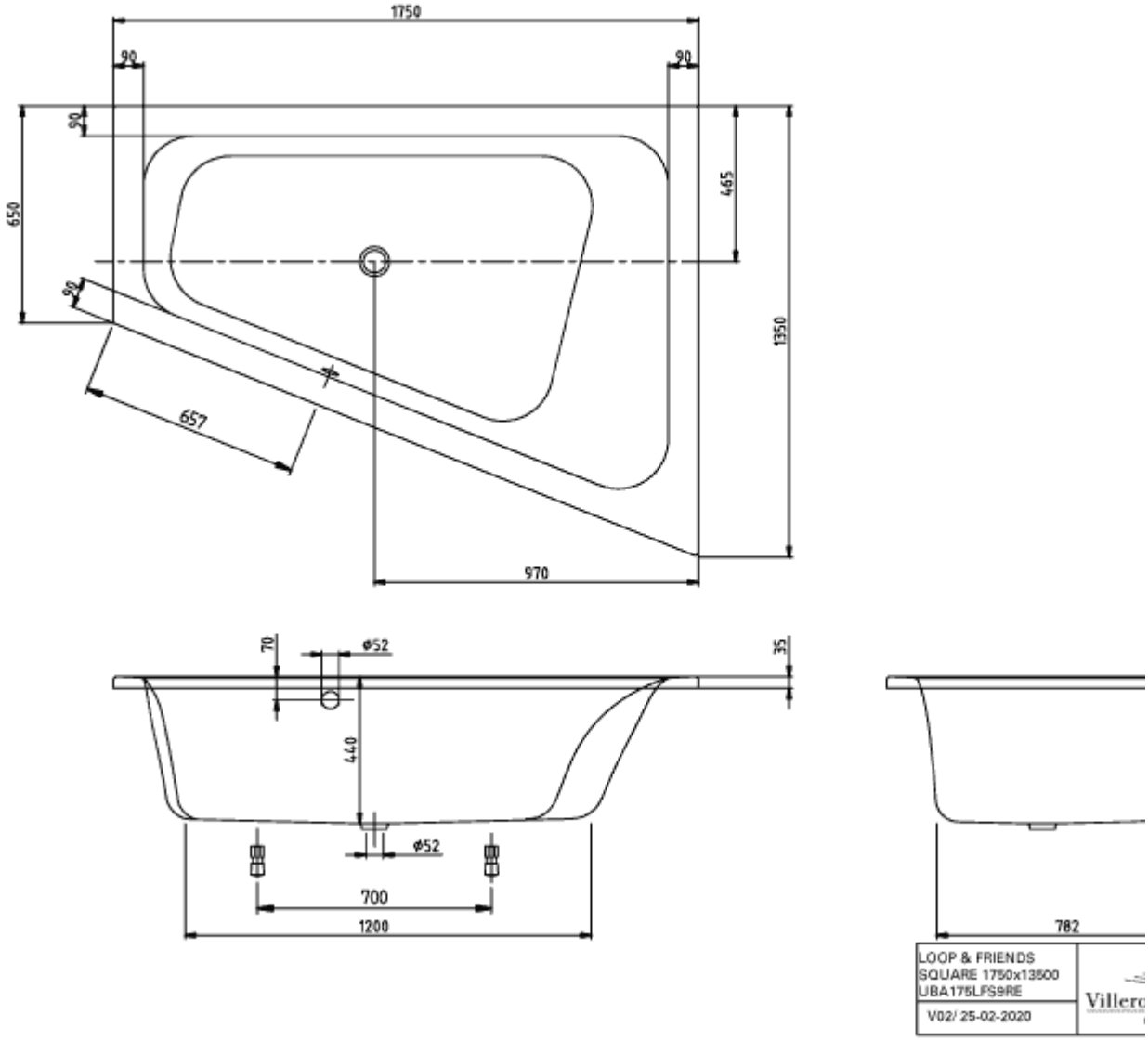
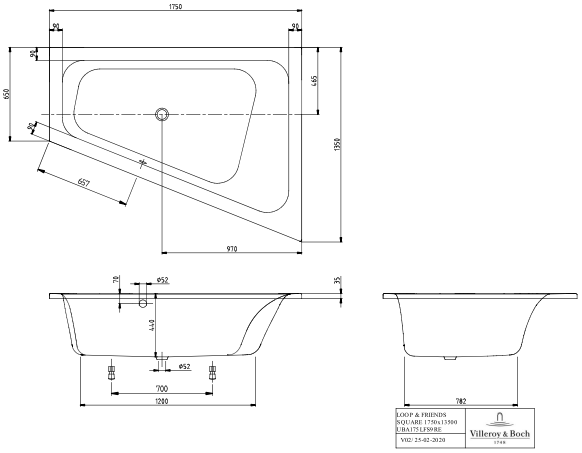
UBA175LFS9REV-01