# FINION VANITY UNIT ANGULAR

## PRODUCT INFORMATION

| | |
|---|---|
| Article title | Villeroy & Boch Finion Vanity unit, with lighting, 2 pull-out compartments, 1000 x 603 x 501 mm, Olive Matt Lacquer / Glossy White Lacquer / Glass White Matt |
| Article number | G361GFGM |
| Assembly / Assembly type | wall-mounted |
| Type of opening | 2 pull-out compartments |
| Equipment | 1 x wide glass drawer divider , 2 x pull-out compartment with non-slip mat 3 x narrow glass drawer divider 1 x accessory box S 1 x accessory box M |
| Scope of delivery | 1 x vanity unit , 1 x fastening set |
| Position of washbasin | washbasin on the middle |
| Position of shelf unit | left |
| Depth in mm | 501 |
| Width in mm | 1000 |
| Height in mm | 603 |
| Collection | Finion |
| Suitable for | selected surface-mounted washbasins |
| Function | • with SoftClosing<br>• with lighting<br>• with push-to-open function |
| Material front | MDF |
| Surface of front | Paint |
| Material body | MDF |
| Surface of body | Paint |
| Material shelf element | MDF |
| Surface of shelf unit | Paint |
| Material cover panel | MDF |
| Shape | Angular |
| Colour designation | Olive Matt Lacquer |
| Colour designation of shelf unit | Glossy White Lacquer |
| Colour designation of cover panel | Glass White Matt |
| With lighting | Yes |
| Smart home compatible | No |

## TECHNICAL DRAWINGS

### G361GFGM

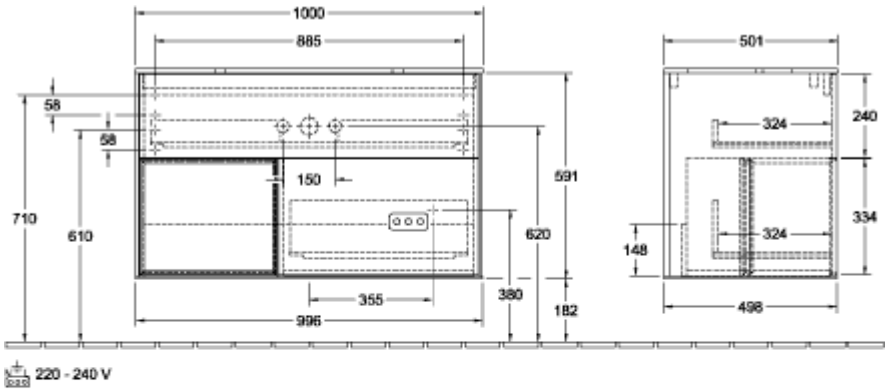


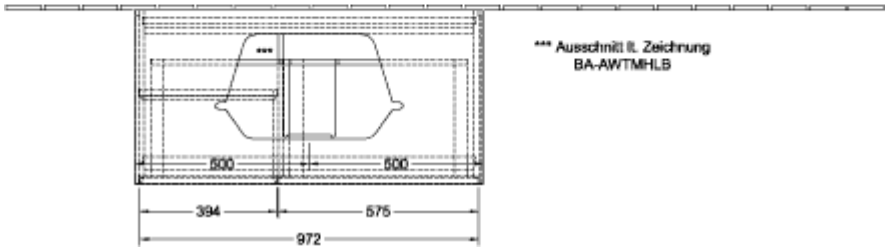

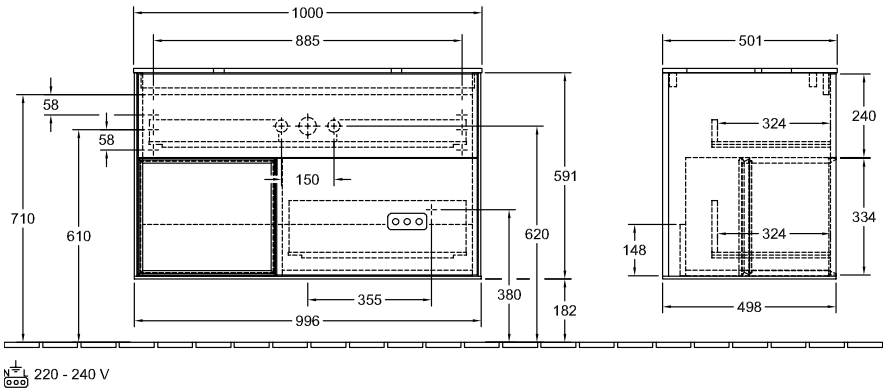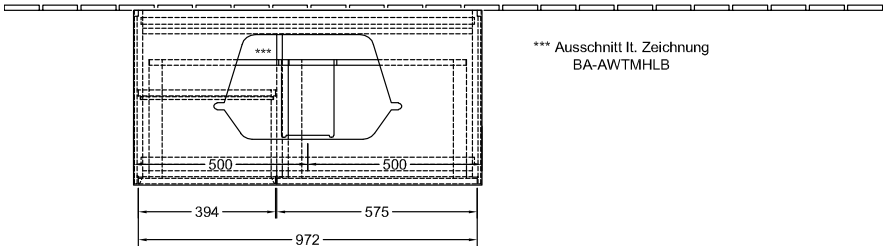
### G361GFGM