FINION VANITY UNIT ANGULAR

PRODUCT INFORMATION

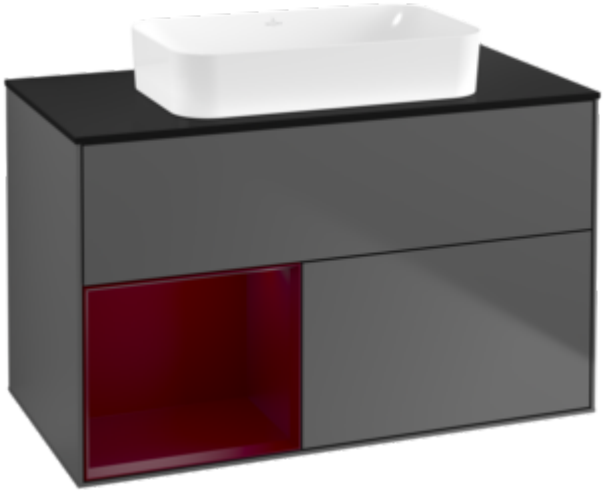

Article title	Villeroy & Boch Finion Vanity unit, with lighting, 2 pull-out compartments, 1000 x 603 x 501 mm, Anthracite Matt Lacquer / Peony Matt Lacquer / Glass Black Matt
Article number	F652HBGK
Assembly / Assembly type	wall-mounted
Type of opening	2 pull-out compartments
Equipment	1 x wide glass drawer divider , 2 x pull-out compartment with non-slip mat 3 x narrow glass drawer divider 1 x accessory box S 1 x accessory box M
Scope of delivery	1 x vanity unit , 1 x fastening set
Position of washbasin	washbasin on the middle
Furniture with tap hole	without drilled tap holes
Position of shelf unit	left
Depth in mm	501
Width in mm	1000
Height in mm	603
Collection	Finion
Suitable for	selected surface-mounted washbasins
Function	• with SoftClosing • with lighting • with push-to-open function
Material front	MDF
Surface of front	Paint
Material body	MDF
Surface of body	Paint
Material shelf element	MDF
Surface of shelf unit	Paint
Material cover panel	MDF
Shape	Angular
Colour designation	Anthracite Matt Lacquer
Colour designation of shelf unit	Peony Matt Lacquer
Colour designation of cover panel	Glass Black Matt
With lighting	Yes
Smart home compatible	No

TECHNICAL DRAWINGS

F652HBGK

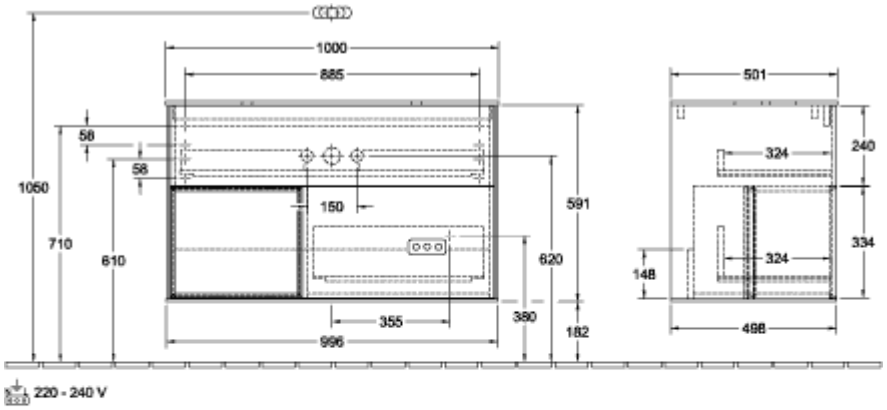

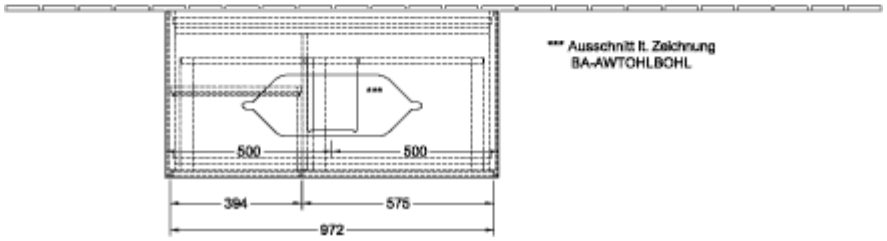
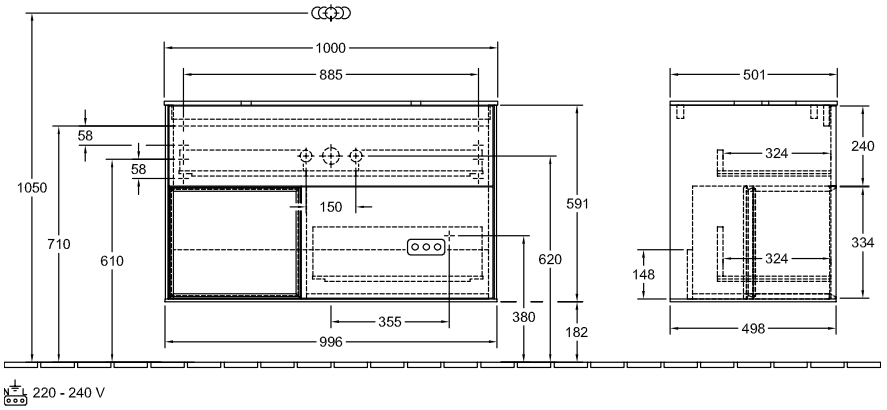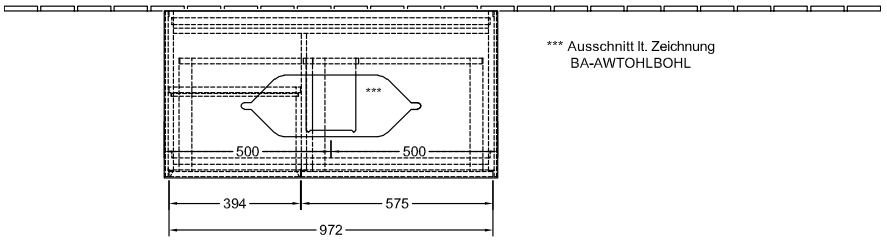
F652HBGK