LEGATO VANITY UNIT ANGULAR

PRODUCT INFORMATION

Article title	Villeroy & Boch Legato Vanity unit, with lighting, 2 pull-out compartments, 1600 x 380 x 500 mm, Glossy White / Glossy White
Article number	B763L0DH
Assembly / Assembly type	wall-mounted
Type of opening	2 pull-out compartments
Equipment	2 x wide glass drawer divider , 4 x narrow glass drawer divider 2 x accessory box L 2 x pull-out compartment with non-slip mat
Scope of delivery	1 x vanity unit , 1 x fastening set
Position of washbasin	washbasin on left
Depth in mm	500
Width in mm	1600
Height in mm	380
Collection	Legato
Suitable for	selected surface-mounted washbasins
Function	• with SoftClosing • with lighting
Material front	MDF
Surface of front	Acrylic film
Material body	MDF
Surface of body	Acrylic film
Material cover panel	Chipboard
Shape	Angular
Colour designation	Glossy White
Colour designation of cover panel	Glossy White
With lighting	Yes
Smart home compatible	No

TECHNICAL DRAWINGS

B763L0DH

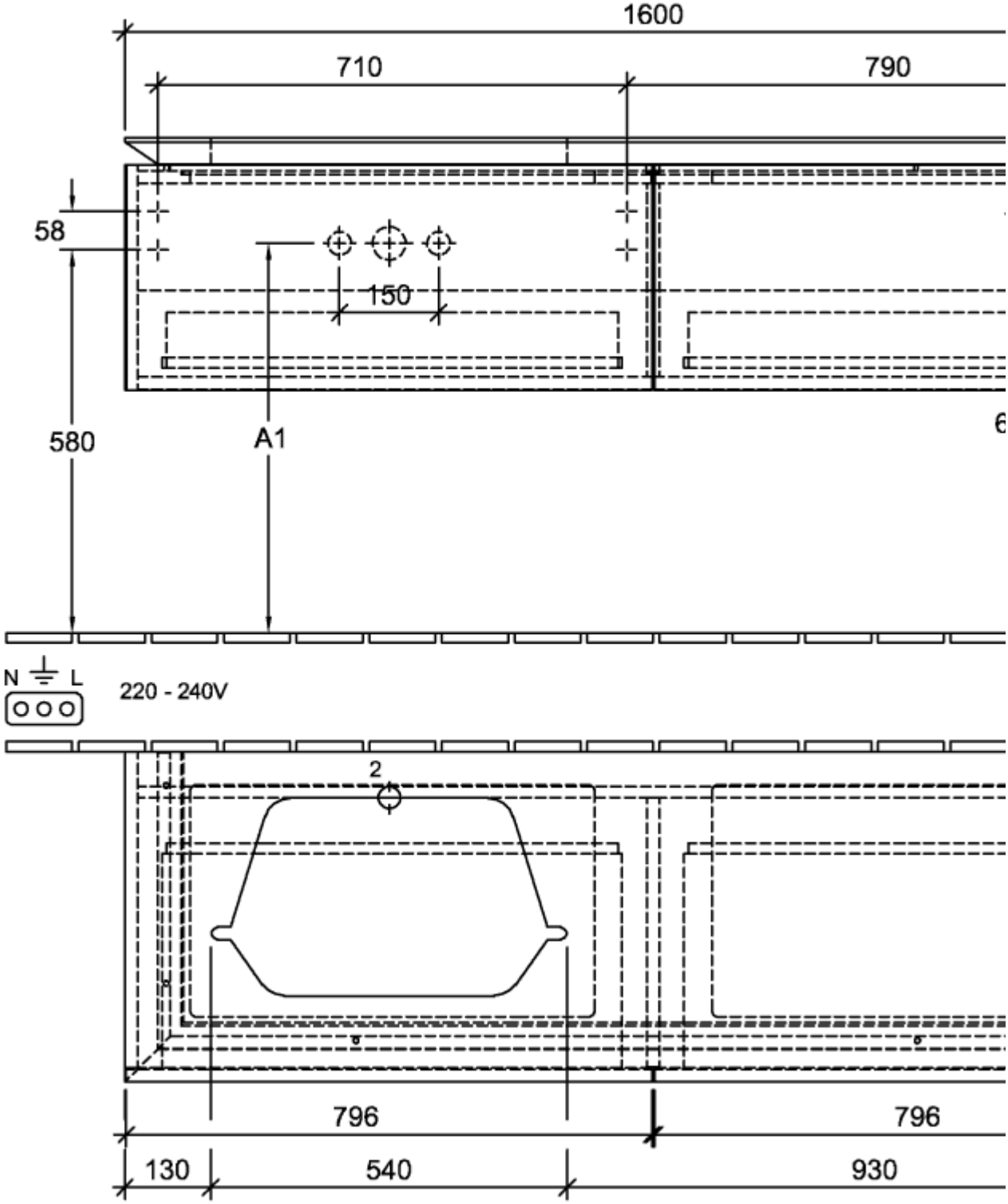

B763L0DH

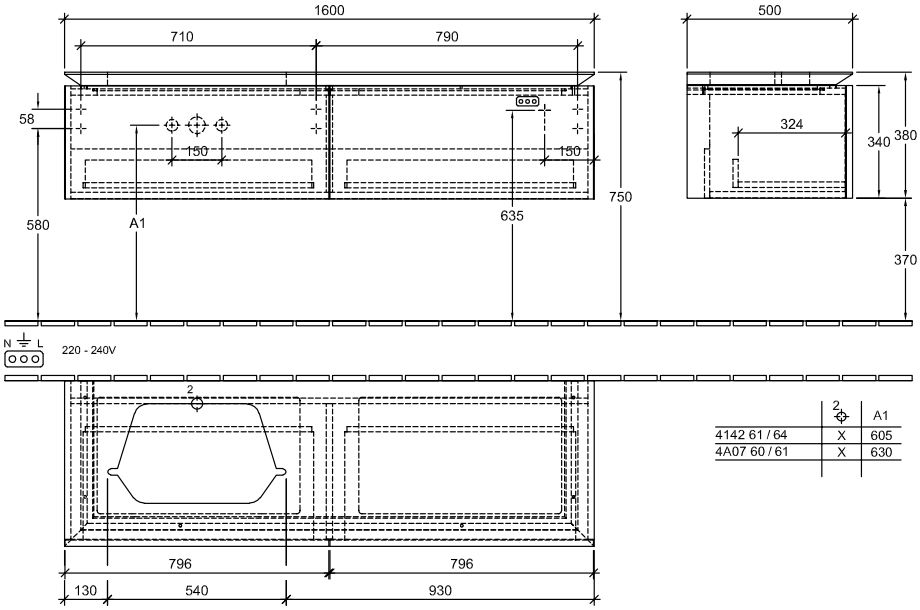

	2	A1
4142 61 / 64	X	605
4A07 60 / 61	X	630