LEGATO VANITY UNIT ANGULAR

PRODUCT INFORMATION

Article title	Villeroy & Boch Legato Vanity unit, 2 pull-out compartments, 1600 x 380 x 500 mm, White Wood / White Wood
Article number	B69000E8
Assembly / Assembly type	wall-mounted
Type of opening	2 pull-out compartments
Equipment	2 x wide glass drawer divider , 4 x narrow glass drawer divider 2 x accessory box L 2 x pull-out compartment with non-slip mat
Scope of delivery	1 x vanity unit , 1 x fastening set
Position of washbasin	washbasin on right
Depth in mm	500
Width in mm	1600
Height in mm	380
Collection	Legato
Tap fitting / Tap hole information	no 3-hole tap fitting possible
Suitable for	selected washbasins
Function	with SoftClosing
Material front	Chipboard
Surface of front	Direct coating
Material body	Chipboard
Surface of body	Direct coating
Material cover panel	Chipboard
Shape	Angular
Colour designation	White Wood
Colour designation of cover panel	White Wood
With lighting	No
Smart home compatible	No

TECHNICAL DRAWINGS

B69000E8

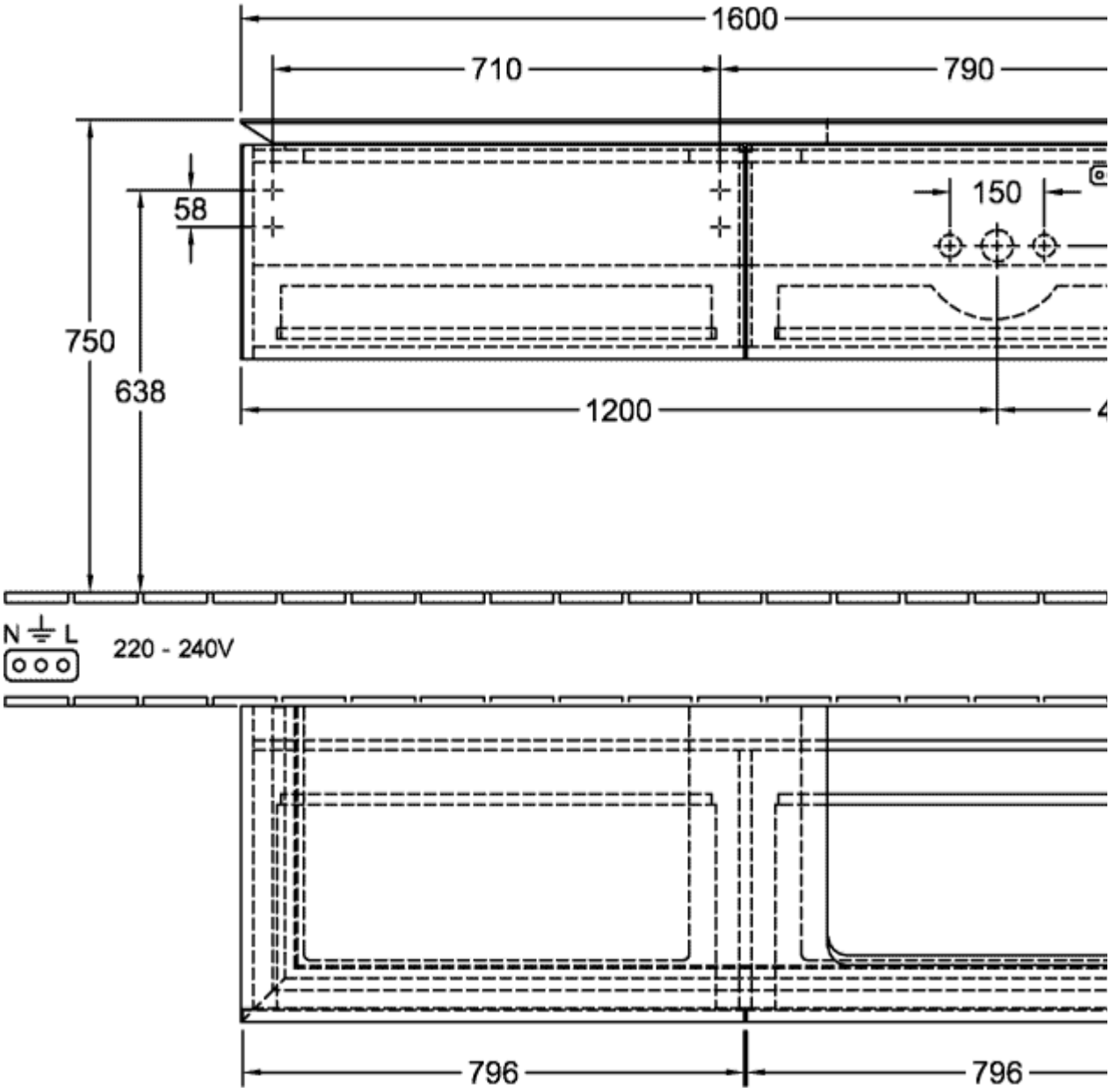

B69000E8

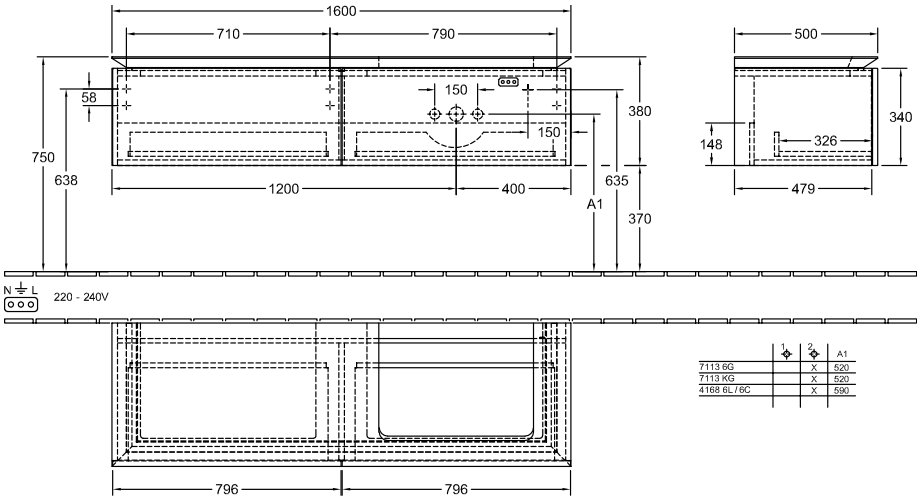

	1	2	A1
7113 6G		X	520
7113 KG		X	520
4168 6L / 6C		X	590