O.NOVO SIPHONIC URINAL OVAL

PRODUCT INFORMATION

Article title	Villeroy & Boch O.novo Siphonic urinal, without cover, water inlet from above, 335 x 320 mm, White Alpin
Article number	75230001
Assembly / Assembly type	wall-mounted
Scope of delivery	1 x siphonic urinal
Depth in mm	320
Width in mm	335
Height in mm	560
Collection	O.novo
Suitable for	Installation without lid
Flush volume l	1,0 / l
Material	Sanitary ceramics
surface	glossy
Colour name	White Alpin
Shape	Oval
Colour designation	White Alpin
Easy surface cleaning (CeramicPlus)	No
Rimless (mit DirectFlush)	Yes
Flush type	Siphonic urinal
Outlet / outlet	Outlet may be concealed depending on the type of extractor section

TECHNICAL DRAWINGS

75230001

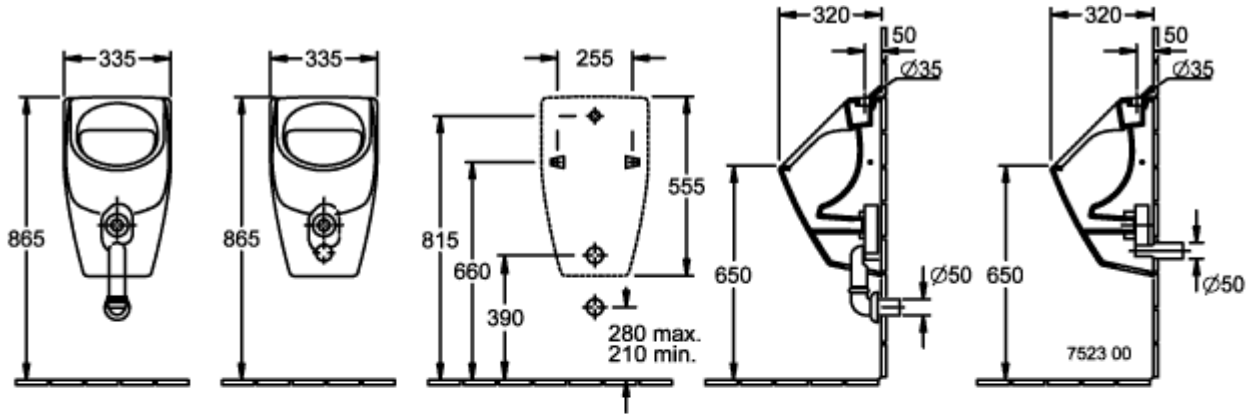

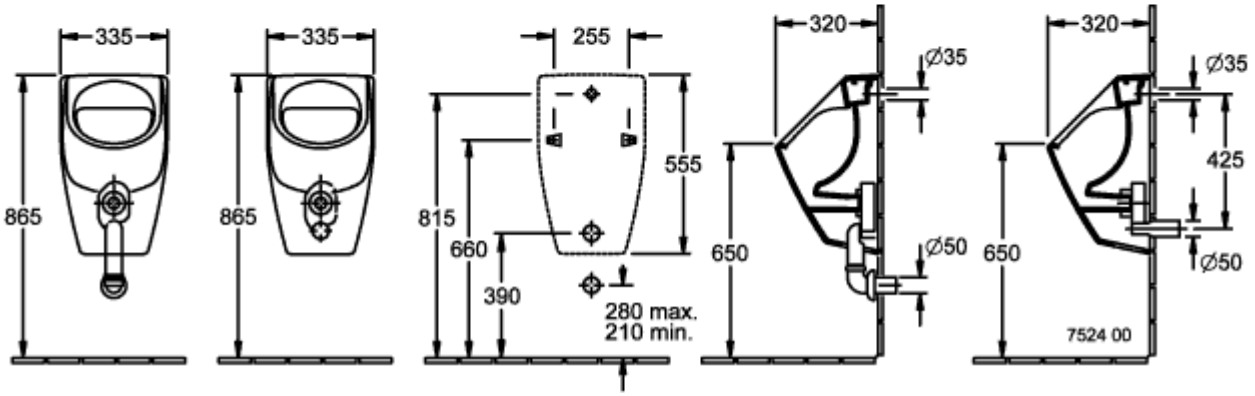
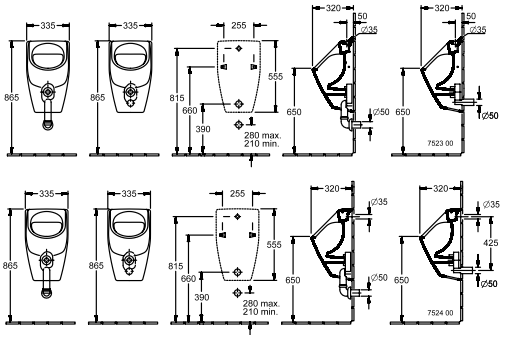
75230001