SUBWAY 2.0 VANITY WASHBASIN RECTANGLE

PRODUCT INFORMATION

Article title	Villeroy & Boch Subway 2.0 Vanity washbasin, 800 x 475 x 175 mm, White Alpin, with overflow
Article number	71758001
Assembly / Assembly type	wall-mounted
Scope of delivery	1 x vanity washbasin
Depth in mm	475
Width in mm	800
Height in mm	175
Interior depth	105
Collection	Subway 2.0
Suitable for	3-hole mixer, Matching Villeroy&Boch furniture
Material	Sanitary ceramics
surface	glossy
Colour name	White Alpin
With overflow	Yes
Shape	Rectangle
Colour designation	White Alpin
Antibacterial surface (with AntiBac)	No
Easy surface cleaning (CeramicPlus)	No
Number of tap holes punched through	1
Number of tap holes pre-drilled	2
Number of bowls	1

TECHNICAL DRAWINGS

71758001

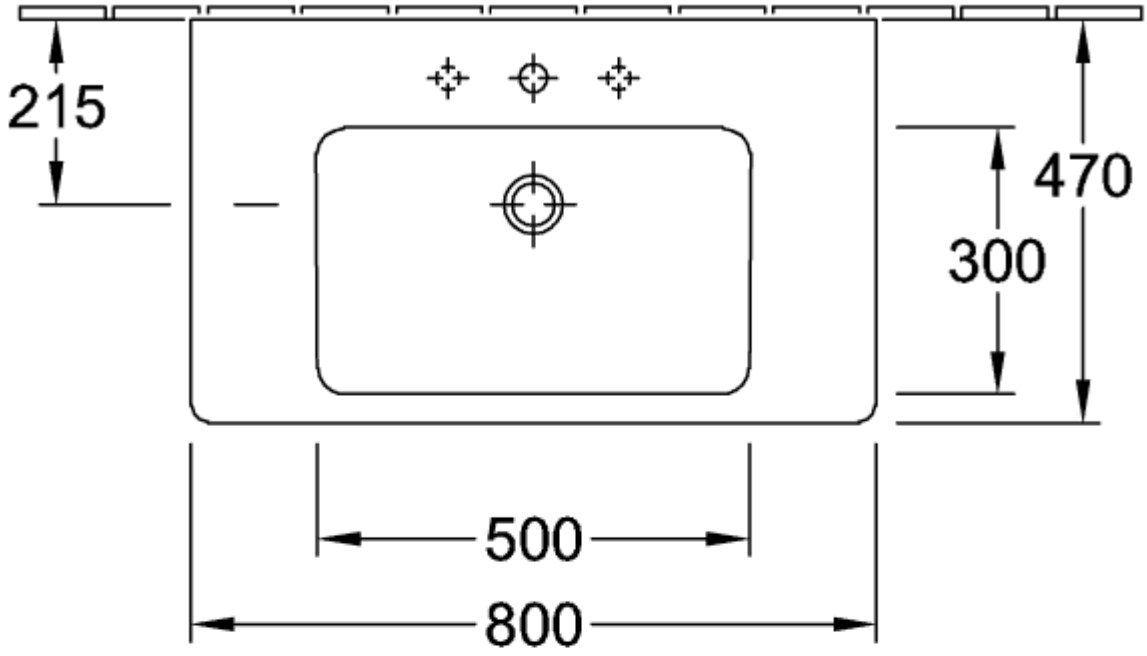

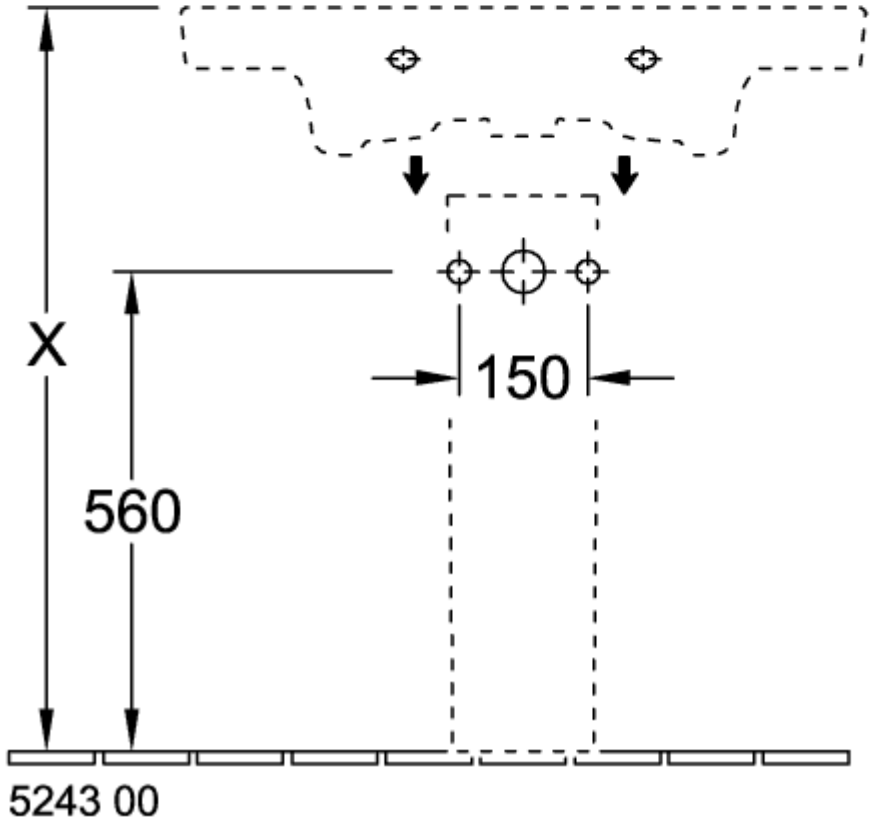

71758001

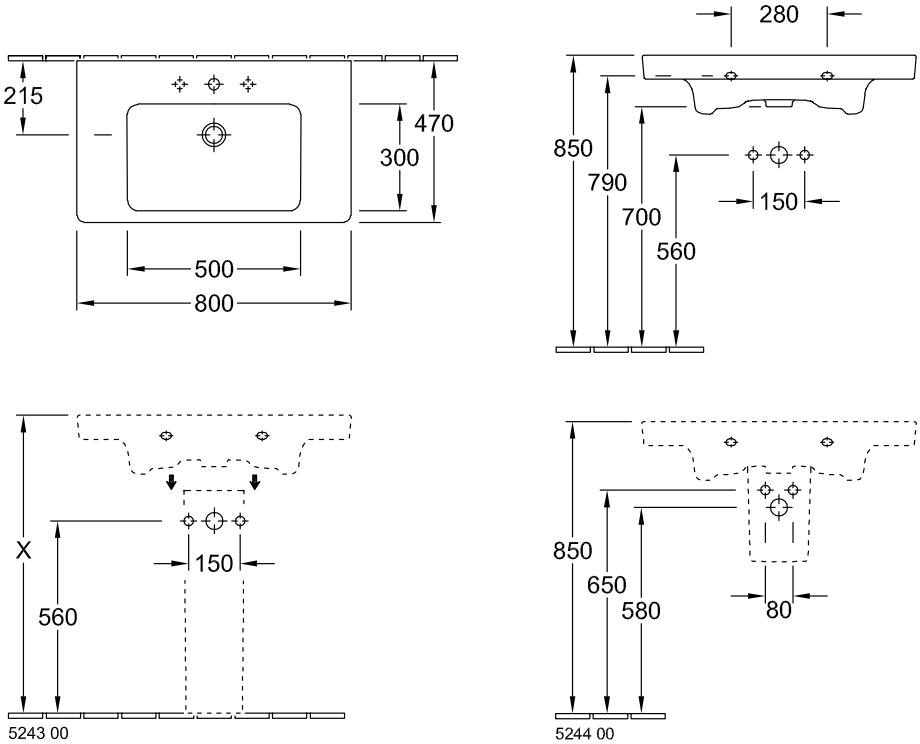

71758001

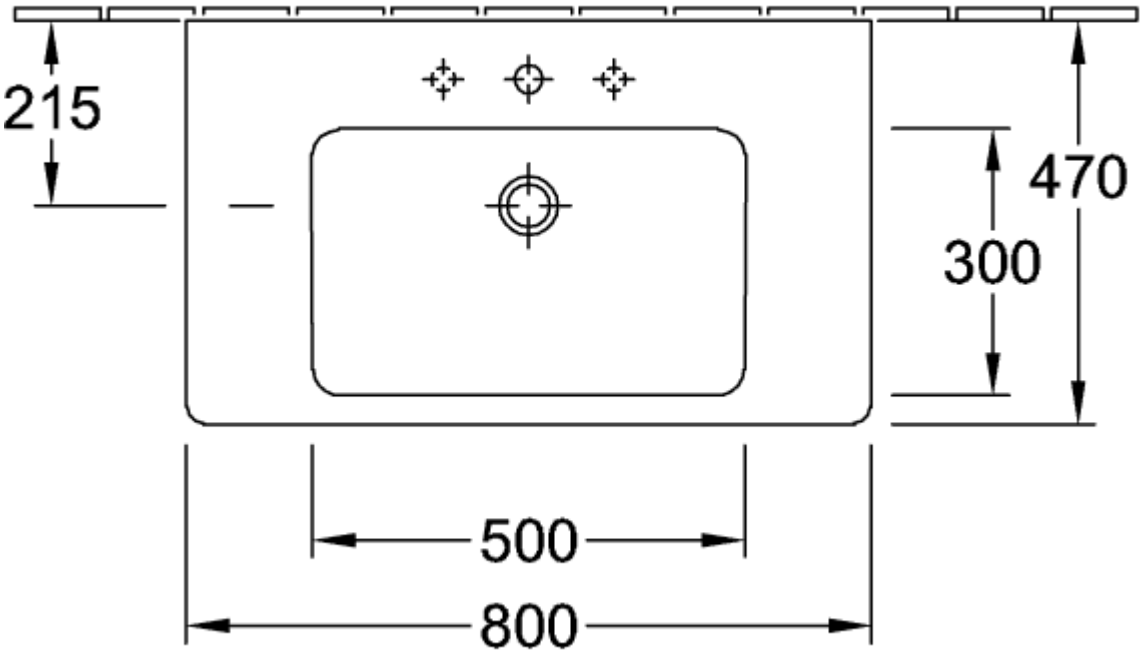
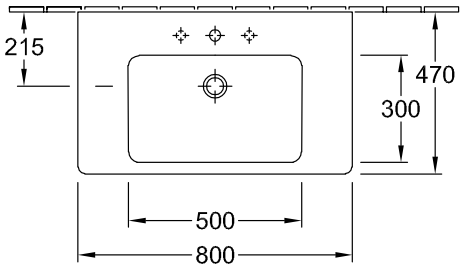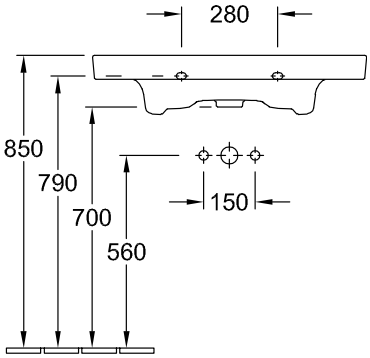
71758001