EVANA UNDERCOUNTER WASHBASIN OVAL

PRODUCT INFORMATION

Article title	Villeroy & Boch Evana Undercounter washbasin, 455 x 305 x 195 mm, White Alpin, with overflow
Article number	61474601
Assembly / Assembly type	Undercounter
Assembly instructions	the hole for the washbasin can only be cut out using the original washbasin because tolerances of several millimetres are possible
Scope of delivery	1 x undercounter washbasin , 1 x fastening set
Depth in mm	305
Width in mm	455
Height in mm	195
Interior depth	150
Collection	Evana
Material	Sanitary ceramics
surface	glossy
Colour name	White Alpin
With overflow	Yes
Shape	Oval
Colour designation	White Alpin
Antibacterial surface (with AntiBac)	No
Easy surface cleaning (CeramicPlus)	No
Number of bowls	1

TECHNICAL DRAWINGS

61474601

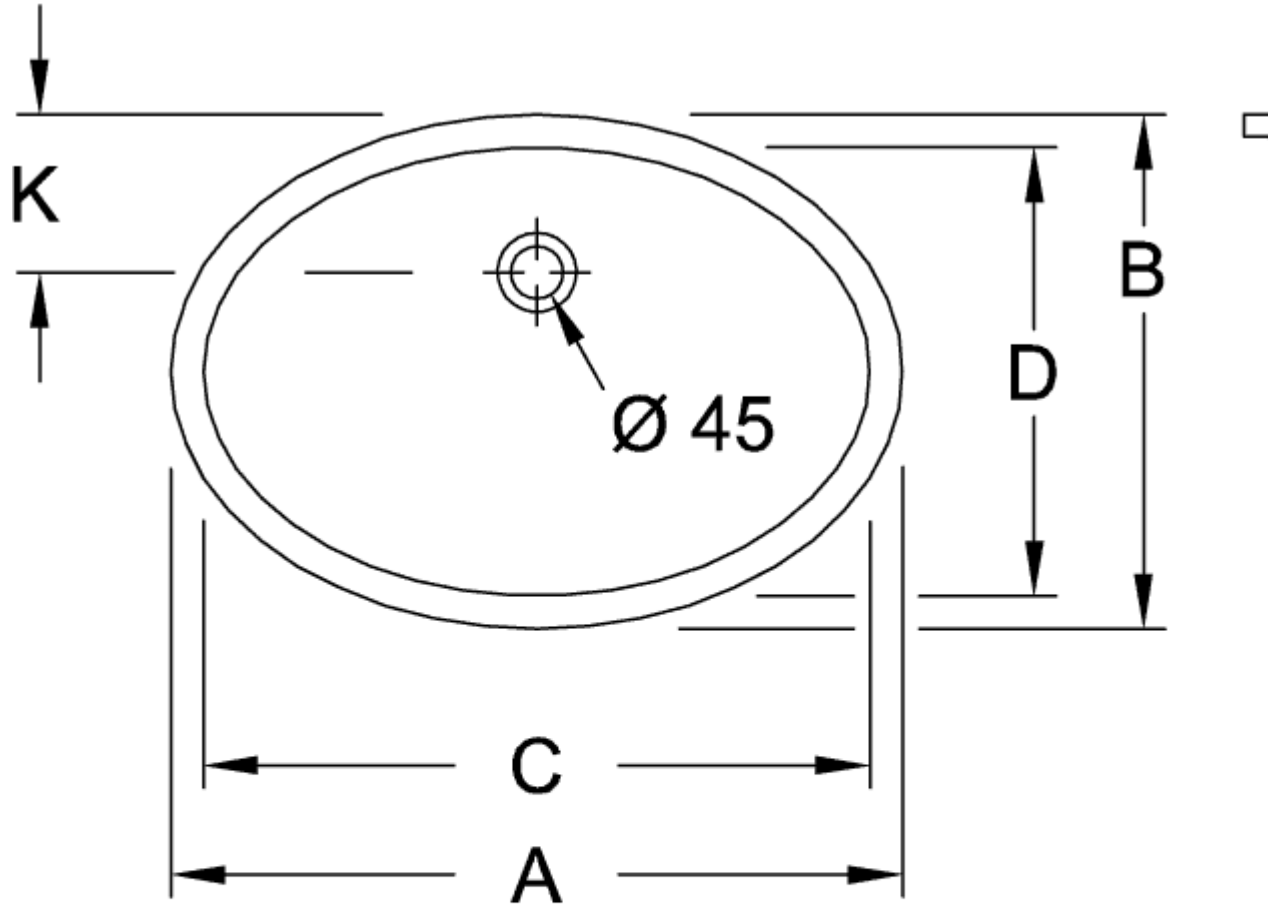

	A	B	C	D	G	K
6144 00	675	475	615	415	215	15
6147 00	570	410	500	350	215	14
6147 46	520	365	455	305	195	12

61474601

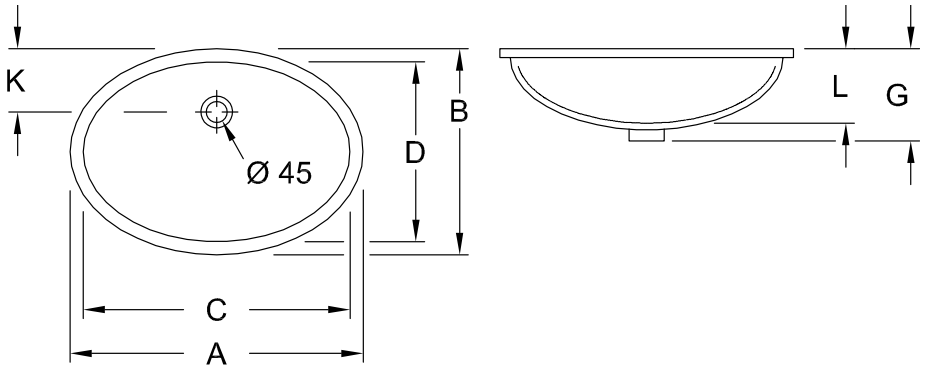

	A	B	C	D	G	K	L
6144 00	675	475	615	415	215	150	165
6147 00	570	410	500	350	215	140	170
6147 46	520	365	455	305	195	125	150