O.NOVO WASHDOWN TOILET FOR CLOSE-COUPLED WC-SUITE OVAL

PRODUCT INFORMATION

Article title	Villeroy & Boch O.novo Washdown toilet for close-coupled WC-suite, floor-standing, White Alpin
Article number	56611001
Assembly / Assembly type	floor-standing
Scope of delivery	1 x washdown toilet , 1 x fastening set
Depth in mm	650
Width in mm	360
Height in mm	400
Collection	O.novo
Suitable for	Mounted cistern
Innovative flushing technology (with TwistFlush)	No
Flush volume l	3 / 4,5 l
Wall-mounted - floor-standing	floor-standing
Material	Sanitary ceramics
surface	glossy
Colour name	White Alpin
Shape	Oval
Colour designation	White Alpin
Antibacterial surface (with AntiBac)	No
Easy surface cleaning (CeramicPlus)	No
Rimless (mit DirectFlush)	No
Flush type	Washdown toilet
Integrated freshness solution (with ViFresh)	No
Outlet / outlet	horizontal outlet

TECHNICAL DRAWINGS

56611001

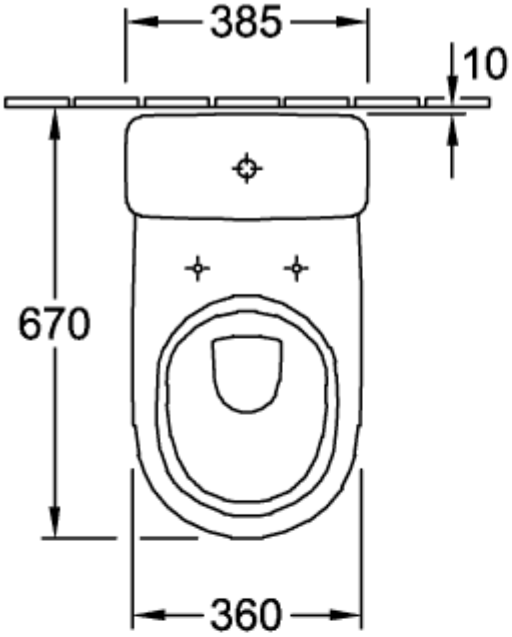

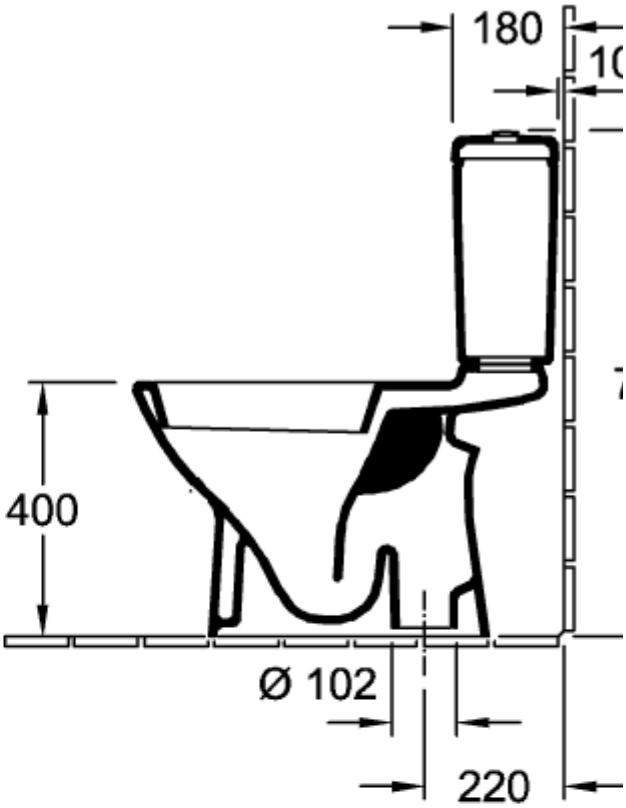

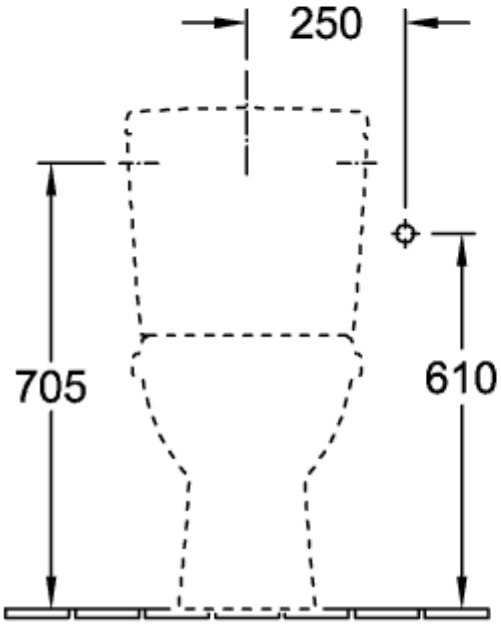

5760-S1 / 21

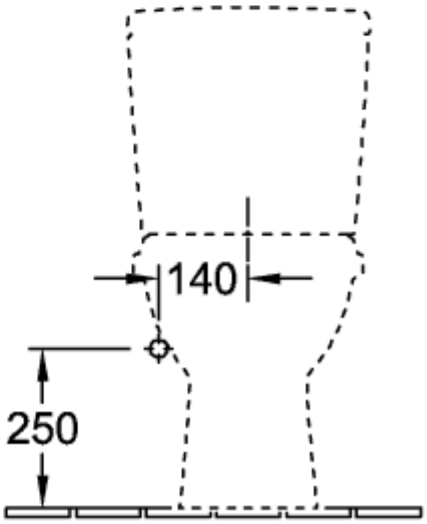

5760-R1

56611001

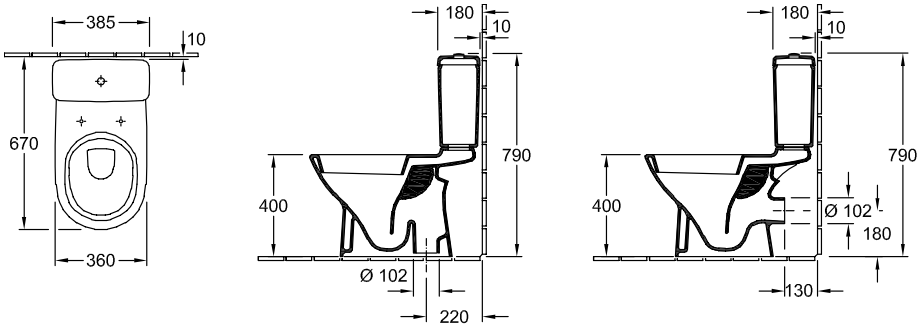

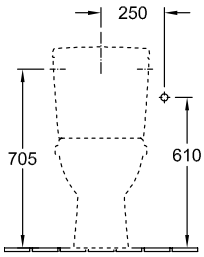

5760-S1 / 21

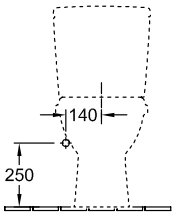

5760-R1

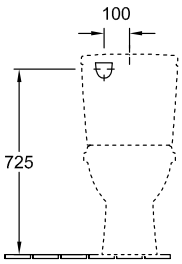

5760-G1