ARCHITECTURA SIPHONIC URINAL RECTANGLE

PRODUCT INFORMATION

Article title	Villeroy & Boch Architectura Siphonic urinal, concealed water inlet, 325 x 355 mm, White Alpin
Article number	55870001
Assembly / Assembly type	wall-mounted
Scope of delivery	1 x siphonic urinal , 1 x outlet 1 x fastening set 1 x ViChange siphon cartridge 1 x ceramic outlet cover
Depth in mm	355
Width in mm	325
Height in mm	680
Collection	Architectura
Suitable for	Installation without lid
Flush volume l	1,0 / l
Material	Sanitary ceramics
surface	glossy
Colour name	White Alpin
Shape	Rectangle
Colour designation	White Alpin
Easy surface cleaning (CeramicPlus)	No
Rimless (mit DirectFlush)	No
Flush type	Siphonic urinal
Outlet / outlet	concealed outlet

TECHNICAL DRAWINGS

55870001

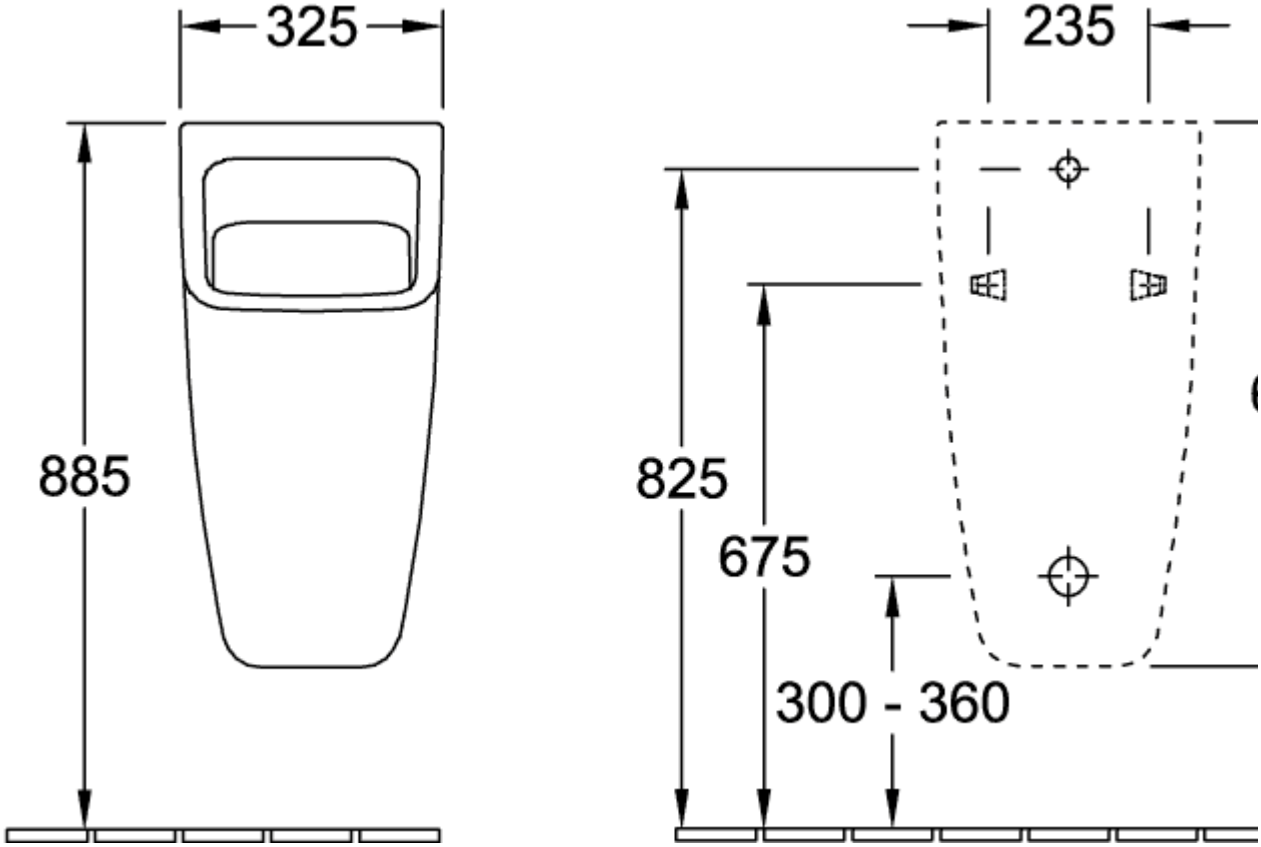
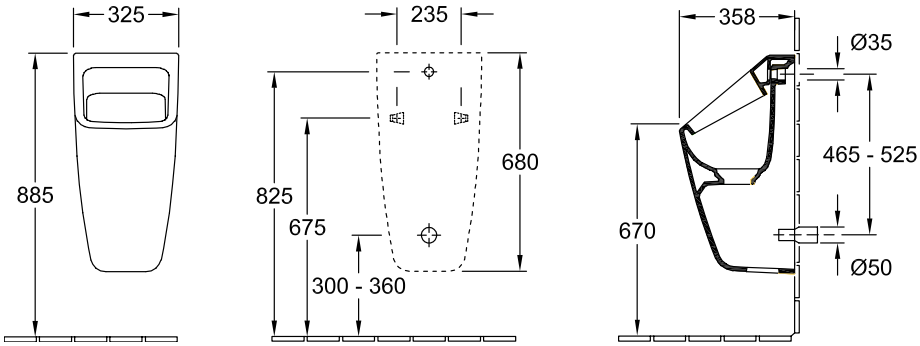
55870001