O.NOVO BIDET OVAL

PRODUCT INFORMATION

Article title	Villeroy & Boch O.novo Bidet, floor-standing, 360 x 570 mm, White Alpin
Article number	54610001
Assembly / Assembly type	floor-standing
Scope of delivery	1 x bidet , 1 x fastening set
Depth in mm	570
Width in mm	360
Height in mm	400
Collection	O.novo
Suitable for	1-hole mixer
Wall-mounted - floor-standing	floor-standing
Material	Sanitary ceramics
surface	glossy
Colour name	White Alpin
Shape	Oval
Colour designation	White Alpin
Antibacterial surface (with AntiBac)	No
Easy surface cleaning (CeramicPlus)	No

TECHNICAL DRAWINGS

54610001

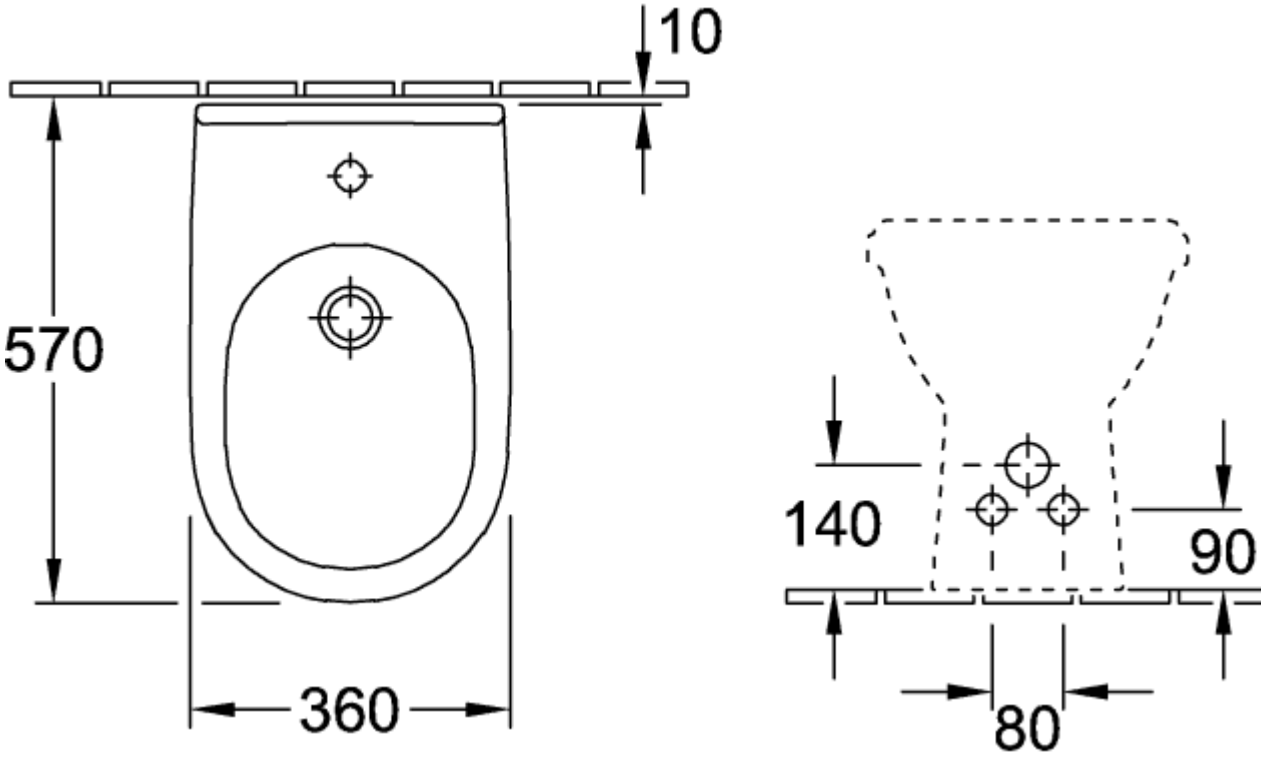
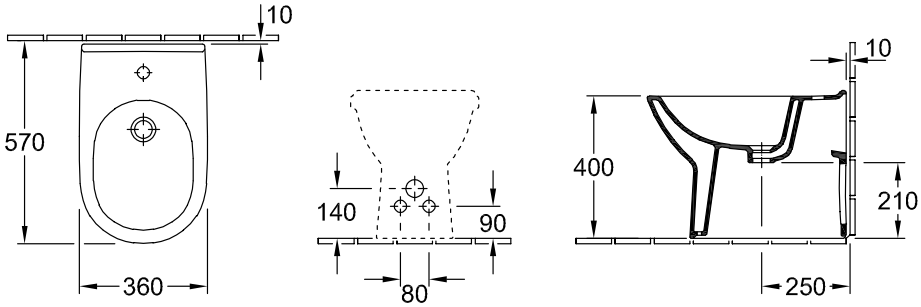
54610001