O.NOVO WASHBASIN COMPACT OVAL

PRODUCT INFORMATION

Article title	Villeroy & Boch O.novo Washbasin Compact, 550 x 370 x 195 mm, White Alpin, with overflow
Article number	51665501
Assembly / Assembly type	wall-mounted
Scope of delivery	1 x washbasin
Depth in mm	370
Width in mm	550
Height in mm	195
Interior depth	130
Collection	O.novo
Suitable for	3-hole mixer
Material	Sanitary ceramics
surface	glossy
Colour name	White Alpin
With overflow	Yes
Shape	Oval
Colour designation	White Alpin
Antibacterial surface (with AntiBac)	No
Easy surface cleaning (CeramicPlus)	No
Number of tap holes punched through	1
Number of tap holes pre-drilled	2
Number of bowls	1

TECHNICAL DRAWINGS

51665501

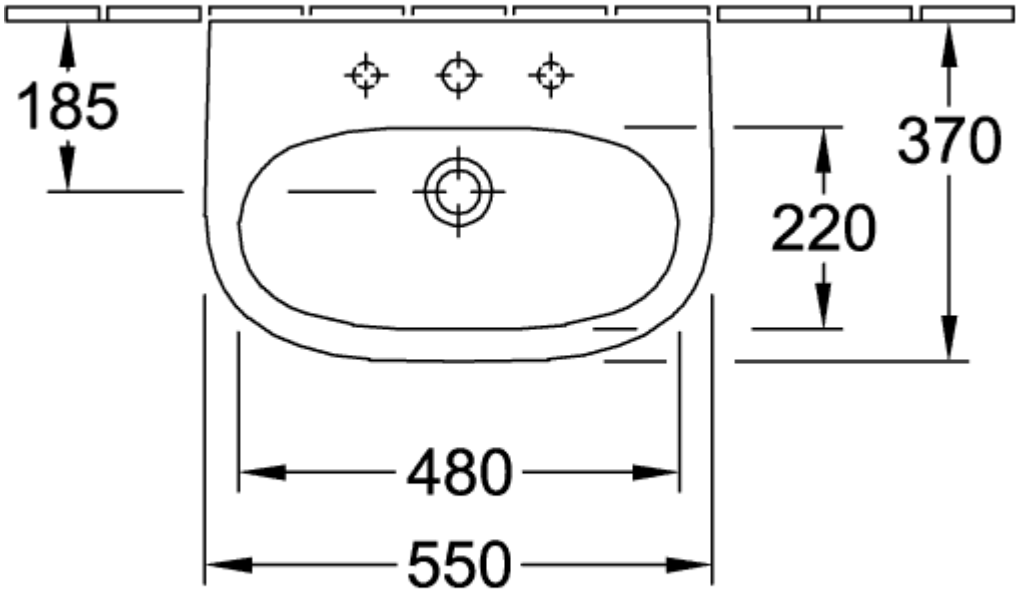
185
370
220
480
550

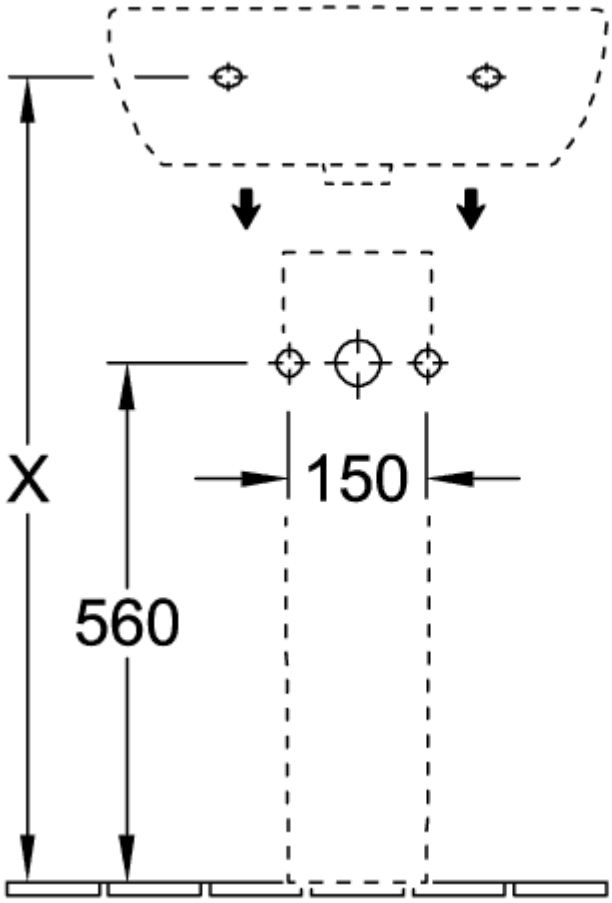
X
150
560
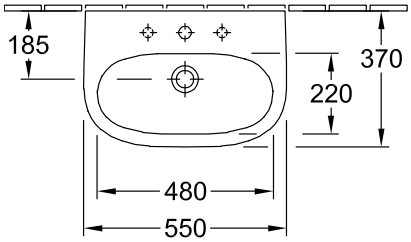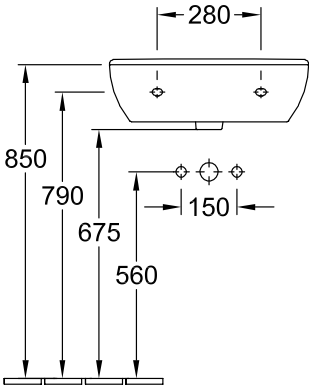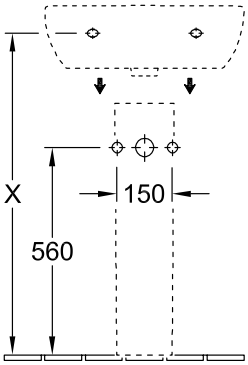
51665501