O.NOVO WASHBASIN OVAL

PRODUCT INFORMATION

Article title	Villeroy & Boch O.novo Washbasin, 550 x 450 x 200 mm, White Alpin, without overflow
Article number	51605601
Assembly / Assembly type	wall-mounted
Scope of delivery	1 x washbasin
Depth in mm	450
Width in mm	550
Height in mm	200
Interior depth	135
Collection	O.novo
Tap fitting / Tap hole information	Please note: unclosable outlet valve must be used with models without overflow
Suitable for	3-hole mixer
Material	Sanitary ceramics
surface	glossy
Colour name	White Alpin
With overflow	No
Shape	Oval
Colour designation	White Alpin
Antibacterial surface (with AntiBac)	No
Easy surface cleaning (CeramicPlus)	No
Number of tap holes punched through	1
Number of tap holes pre-drilled	2
Number of bowls	1

TECHNICAL DRAWINGS

51605601

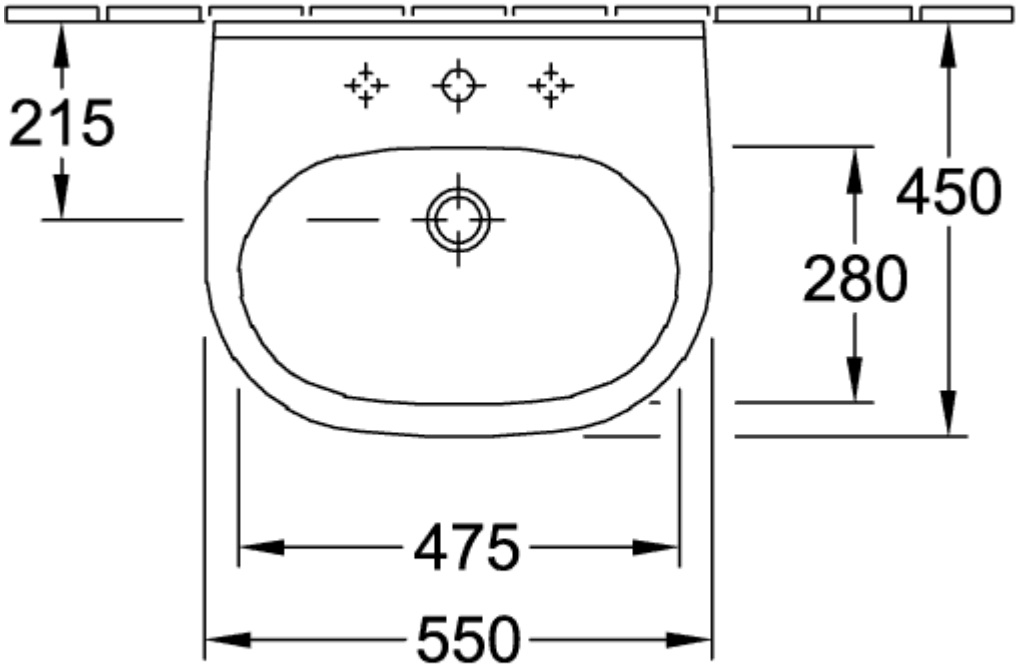

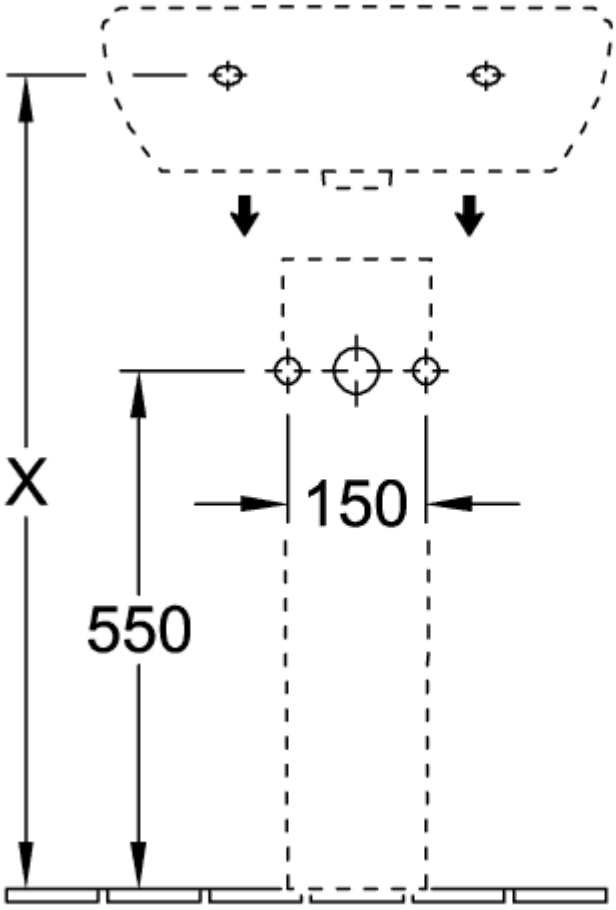

5265 00

51605601

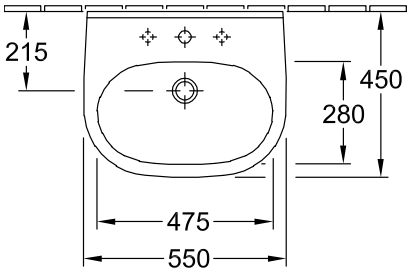

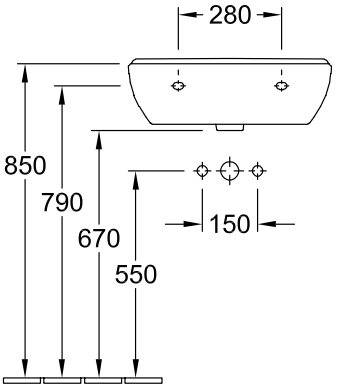

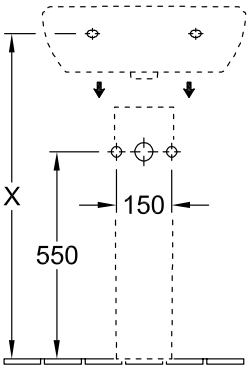

5265 00

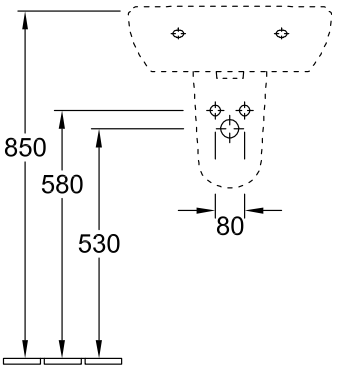

5266 00

51605601

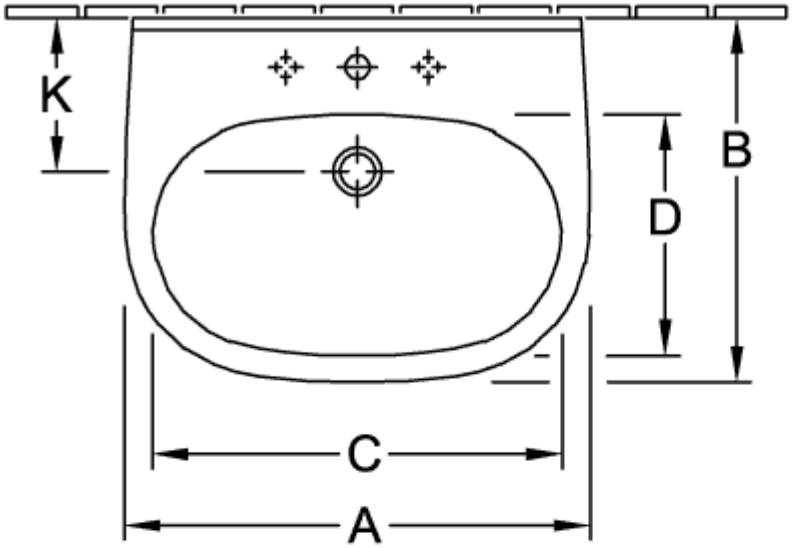

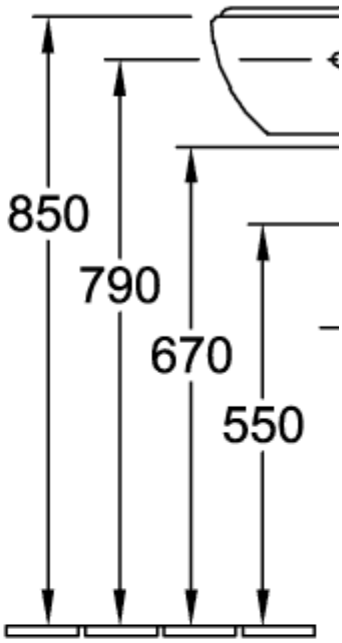

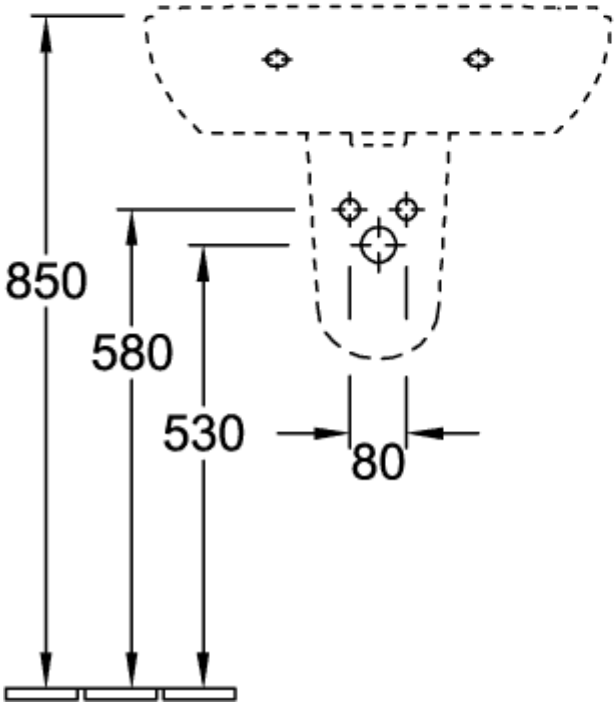

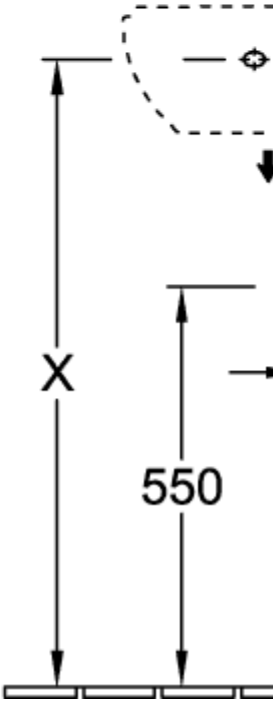

51605601

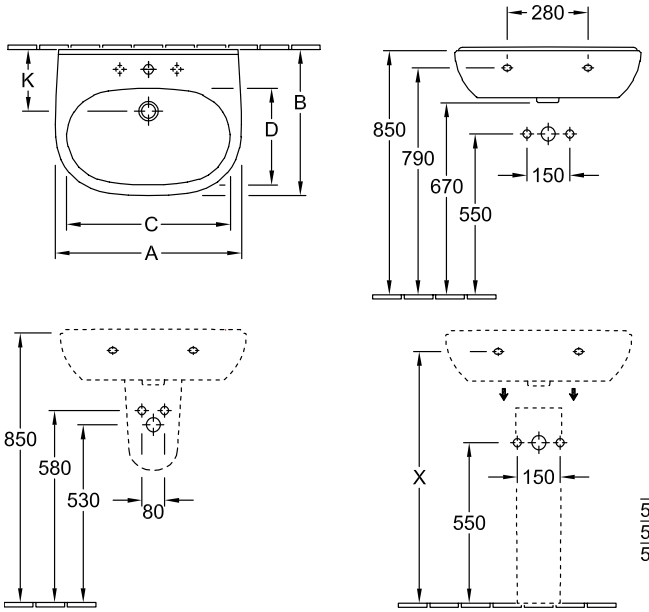

	A	B	C	D
5160 55	550	450	475	280
5160 60	600	490	525	315
5160 65	650	510	565	330