MEMENTO 2.0 WASHBASIN RECTANGLE

PRODUCT INFORMATION

Article title	Villeroy & Boch Memento 2.0 Washbasin, 800 x 470 x 140 mm, Ebony CeramicPlus, with overflow, ground
Article number	4A228GS5
Assembly / Assembly type	wall-mounted
Scope of delivery	1 x washbasin , 1 x cut-out template
Depth in mm	470
Width in mm	800
Height in mm	140
Interior depth	95
Collection	Memento 2.0
Suitable for	3-hole mixer, Matching Villeroy&Boch furniture
Material	TitanCeram
surface	matt
Colour name	Ebony CeramicPlus
With overflow	Yes
Shape	Rectangle
Colour designation	Ebony
Antibacterial surface (with AntiBac)	No
Easy surface cleaning (CeramicPlus)	Yes
Number of tap holes punched through	1
Number of tap holes pre-drilled	2
Underside of washbasin	ground
Number of bowls	1

TECHNICAL DRAWINGS

4A228GS5

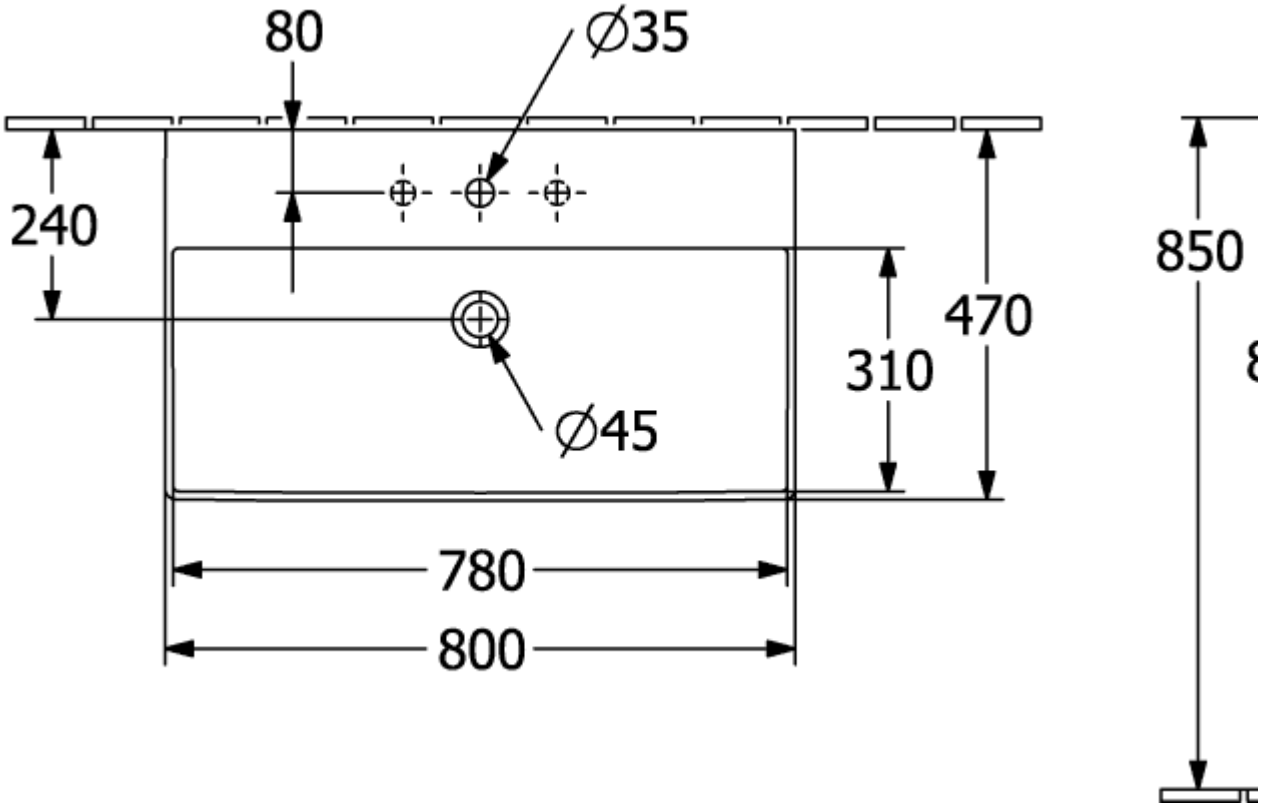
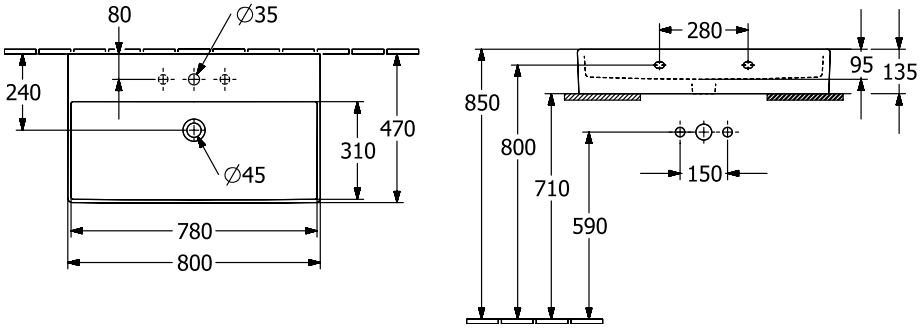
4A228GS5