ANTHEUS SURFACE-MOUNTED WASHBASIN RECTANGLE

PRODUCT INFORMATION

Article title	Villeroy & Boch Antheus Surface-mounted washbasin, 645 x 390 x 150 mm, White Alpin CeramicPlus, without overflow
Article number	4A1065R1
Assembly / Assembly type	Surface-mounted
Scope of delivery	1 x surface-mounted washbasin , 1 x fastening set 1 x cut-out template
Depth in mm	390
Width in mm	645
Height in mm	150
Interior depth	115
Collection	Antheus
Tap fitting / Tap hole information	Please note: unclosable outlet valve must be used with models without overflow
Suitable for	Wall-mounted tap fittings, Matching Villeroy&Boch furniture|Tap fitting with raised base
Material	TitanCeram
surface	glossy
Colour name	White Alpin CeramicPlus
With overflow	No
Shape	Rectangle
Colour designation	White Alpin
Antibacterial surface (with AntiBac)	No
Easy surface cleaning (CeramicPlus)	Yes
Underside of washbasin	unground
Number of bowls	1

TECHNICAL DRAWINGS

4A1065R1

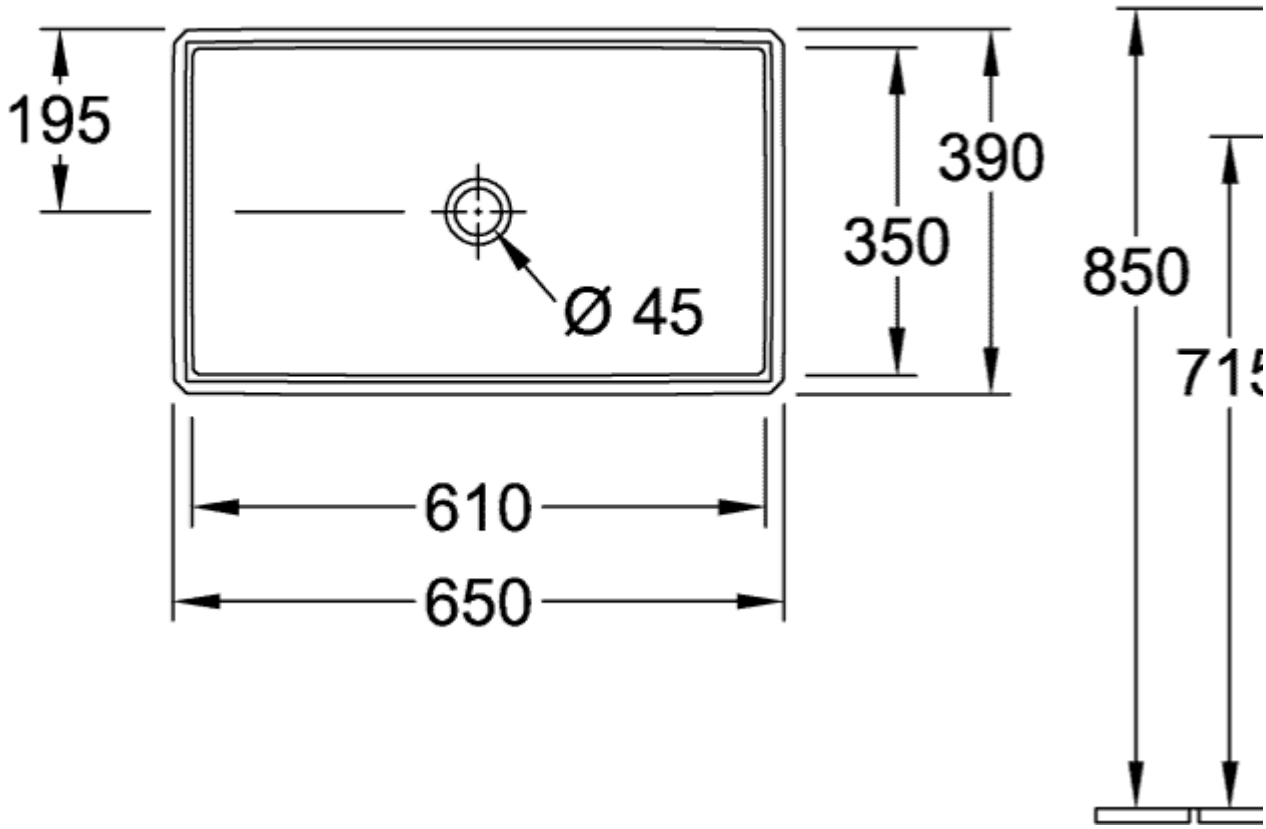
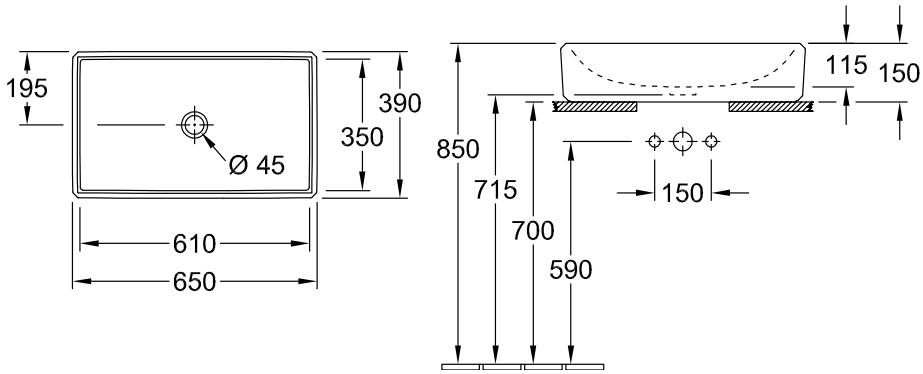
4A1065R1