FINION VANITY WASHBASIN RECTANGLE

PRODUCT INFORMATION

Article title	Villeroy & Boch Finion Vanity washbasin, 1200 x 500 x 160 mm, Stone White CeramicPlus, with concealed overflow, unground
Article number	4164CBRW
Assembly / Assembly type	surface-mounted installation
Assembly instructions	supporting the washbasin with a suitable furniture frame
Scope of delivery	1 x vanity washbasin , 1 x concealed ViFlow overflow with ceramic valve cover
Depth in mm	500
Width in mm	1200
Height in mm	160
Interior depth	100
Collection	Finion
Suitable for	1-hole mixer, Matching Villeroy&Boch furniture
Material	TitanCeram
surface	matt
Colour name	Stone White CeramicPlus
With overflow	Yes
Shape	Rectangle
Colour designation	Stone White
Antibacterial surface (with AntiBac)	No
Easy surface cleaning (CeramicPlus)	Yes
Number of tap holes punched through	1
Underside of washbasin	unground
Number of bowls	1

TECHNICAL DRAWINGS

4164CBRW

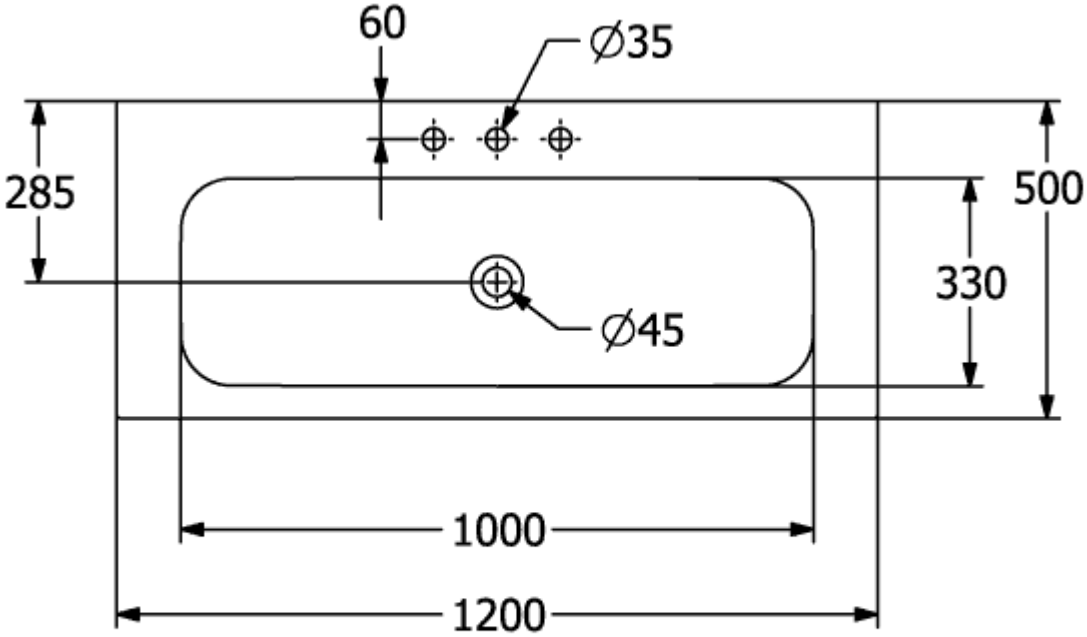
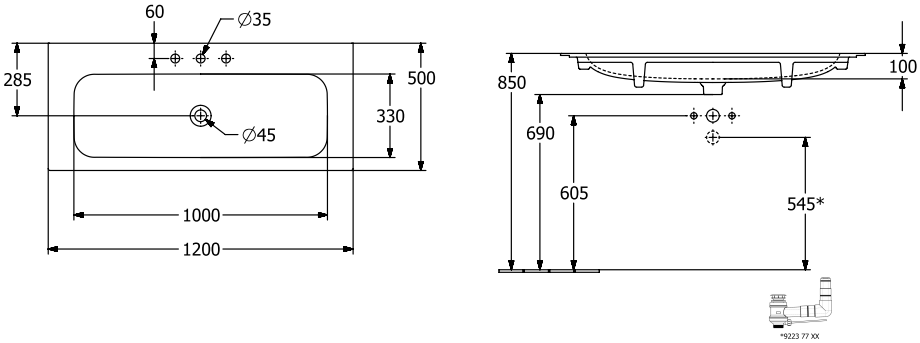
4164CBRW